DAYTONA 150E ENGINE

Owner's Manual

DT150

ENGINE No. DAYTONA150E091200000 –

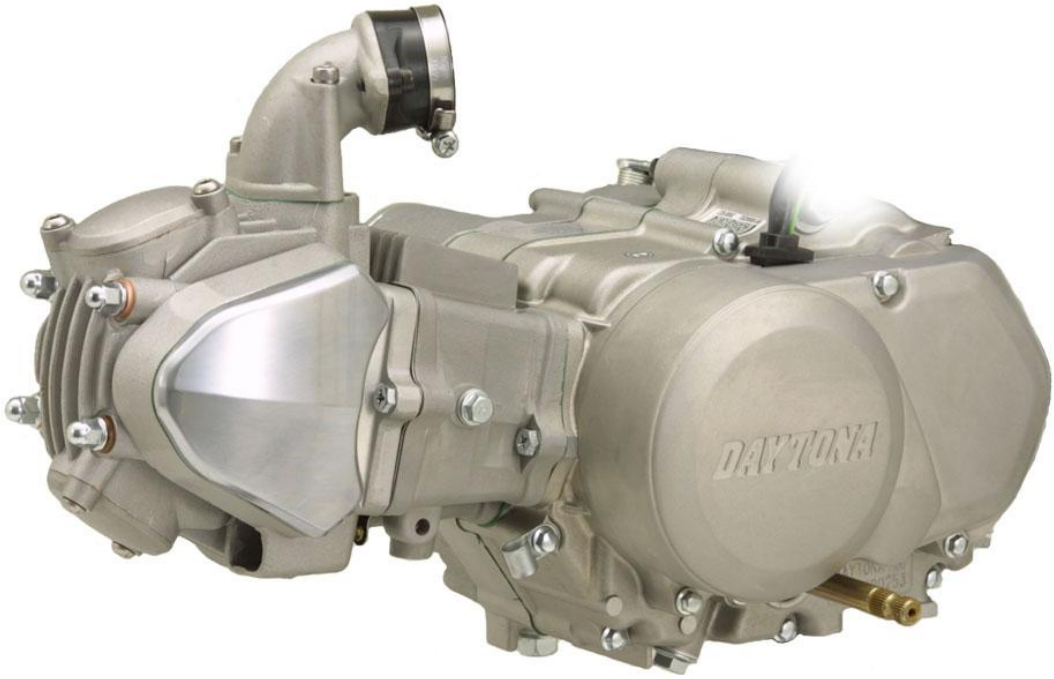

DAYTONA corp.

DAYTONA 150E ENGINE
Owner's Manual

INTRODUCTION

Congratulations on your purchase of a DAYTONA 150E Engine.

This manual explains operation, inspection, basic maintenance and tuning of the engine.

If you have any questions, please contact the dealer you purchased the engine/bike from.

Please read this manual very carefully before use.

WARNING

1. DAYTONA 150E ENGINE is designed strictly FOR COMPETITION USE, ONLY ON A CLOSED COURSE. It is illegal to use this engine on any public road or highway. Off-road use on public space is also illegal.
   Please check local regulation before use.
2. This engine is to be used by an EXPERIENCED RIDER ONLY.
   Fatal accident may be caused unless it is used by experienced riders or maintained by professional and experienced mechanics.
3. This engine is to be maintained by professional and experienced mechanics.
   Serious damage may occur, otherwise.
4. This manual explains ONLY THE BASIC operation, inspection, maintenance and tuning, but it is customer’s responsibility to maintain the engine to the best possible performance, depending on the circumstances of the time.

CUSTOMER'S RESPONSIBILITY & CUSTOMER SERVICE

GENERAL EXCLUSIONS

Any failures caused by the following reasons are NOT considered as the defects of Products.

(1) Overheating due to improper engine oil temp. control

WARNING

ENGINE OIL TEMPERATURE MUST BE CONTROLLED AT 90 DEGREES CELSIUS (194 DEGREES FAHRENHEIT) OR LOWER.

Serious damage will occur in the engine if engine oil temperature exceeds 90 degrees Celsius or 194 degrees Fahrenheit.

It is solely customer's responsibility to control the engine oil temperature.

(2) Installation of parts or accessories that is not originally equipped on Products.
This includes DAYTONA UPGRADE KIT PARTS as well, since those are designed for the top competition riders.

(3) Abnormal strain, neglect, or abuse

(4) Accident or collision damage

(5) Modification to original parts

(6) Lack of proper maintenance

(7) Damage due to improper transportation or use

THE CUSTOMER'S RESPONSIBILITY

THE CUSTOMER'S RESPONSIBILITY shall be :

(1) Operate and maintain Products as specified in the appropriate Owner's Manual

CUSTOMER SERVICE

If Products require services, you must take it to the authorized dealer, who is appointed by authorized local distributors of DAYTONA.

DAYTONA Corp. JAPAN is NOT in the position to take care of services of any kind with the customers or authorized dealers due to the contract with authorized local distributors.

DAYTONA 150E ENGINE
Owner's Manual

CONTENTS

PART NAMES

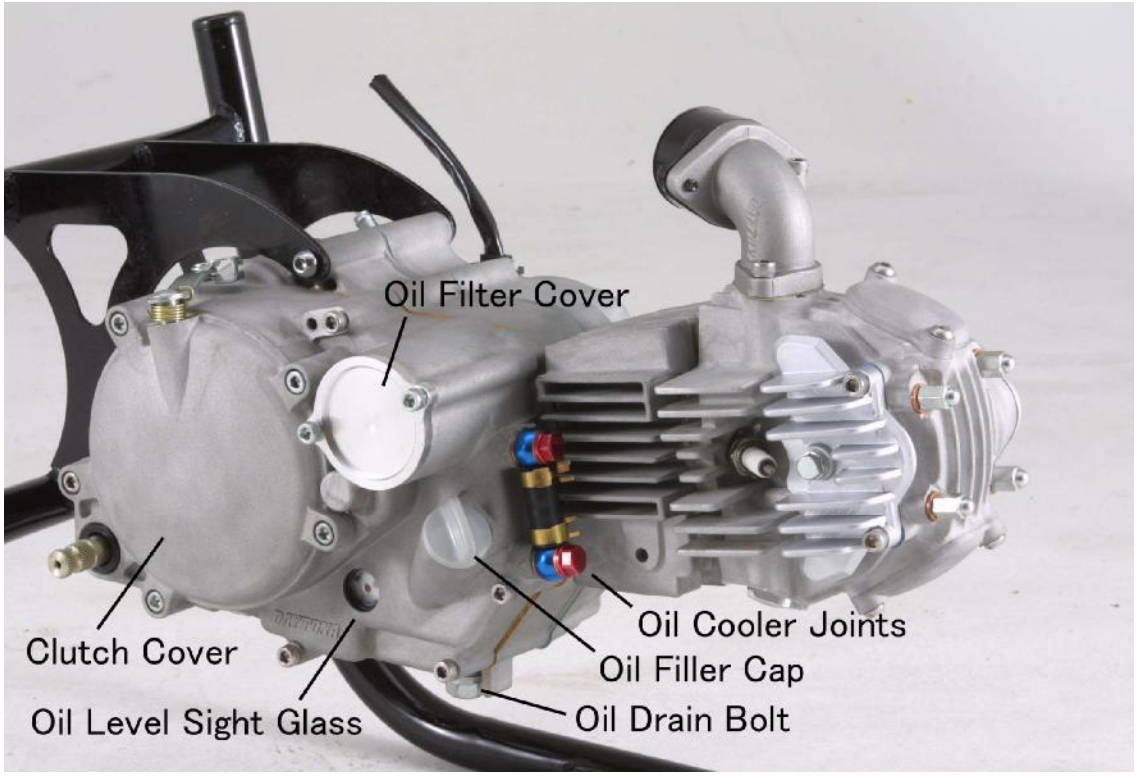
Oil Filter Cover
Clutch Cover
Oil Level Sight Glass
Oil Cooler Joints
Oil Filler Cap
Oil Drain Bolt

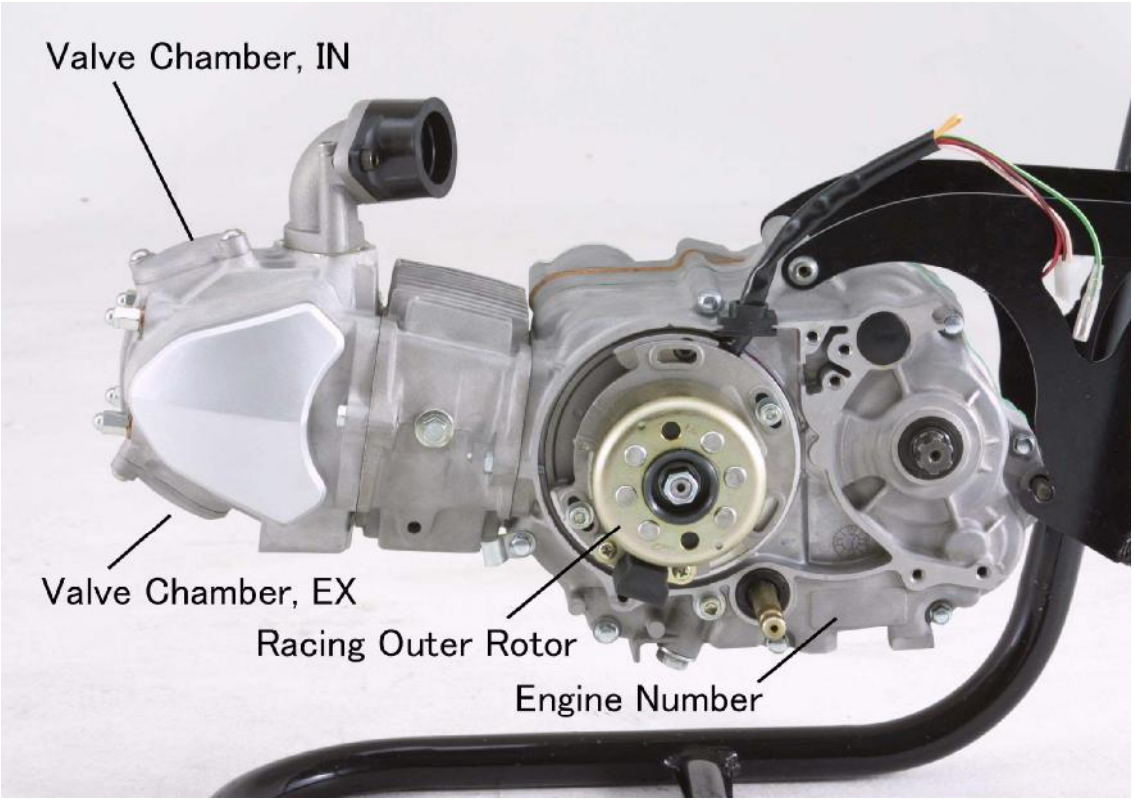
Valve Chamber, IN
Valve Chamber, EX
Racing Outer Rotor
Engine Number

GENERAL SPECIFICATIONS

ENGINE	
Engine Weight (Dry)	18.0 kg
Engine type	Air Cooled 4-stroke SOHC
Cylinder arrangement	Single cylinder, Horizontally mounted
Displacement	149.78 cm3
Bore × stroke	57.0 × 58.7 mm (2.244 × 2.311 in)
Compression ratio	12.5 : 1
Starting system	Kick (Kick pedal is NOT included in the Engine Kit)
Lubrication system	Wet sump
Recommended Engine Oil	SAE 10W-40 or higher grade API “SG” or higher grade
Engine oil capacity	
Periodic oil change	0.60 L
With oil filter replacement	0.65 L
Total amount	0.70 L
	* Need more amount of oil when oil cooler is in use
Spark plug	
Type/manufacturer	CR8HSA/NGK (resistance type)
Gap	0.7 ~ 0.8 mm (0.028 ~ 0.031 in)
Clutch type	Wet, Multi-plate 5-disc
Transmission	
Primary reduction system	Gear
Primary reduction ratio	67/18 (3.722)
Transmission type	4-Speed / (DT150BS type)
Gear ratio	(Counter / Main)
1st	34/13 (2.6153)
2nd	29/17 (1.7058)
3rd	26/20 (1.3000)
4th	24/23 (1.0434)
GEAR SHIFT PATTERN	N-1-2-3-4
Electrical	
Ignition system	AC-CDI
Generator system	AC magneto

MAINTENANCE SPECIFICATIONS

Item	Standard	Limit
Cylinder head Warp limit 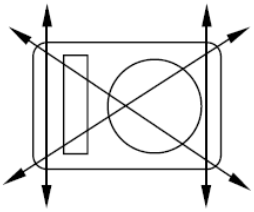	 ----	0.05 mm (0.002 in)
Cylinder: Bore size Out of round limit	 57.00 - 57.015mm (2.2441 – 2.2445) ----	 ---- 0.05 mm (0.002 in)
Camshaft: Drive method Cam dimensions 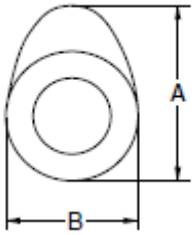 Intake “A” “B” Exhaust “A” “B”	 Chain drive (Left) 26.49 – 26.61 mm (1.04291 – 1.0476 in) ---- ---- 26.23 ~ 26.35 mm (1.0326 ~ 1.0374in) ---- ----	 ---- 26.15 mm (1.0295 in) ---- ---- 25.89 mm (1.0192 in) ---- ----

MAINTENANCE SPECIFICATIONS

Item	Standard	Limit
Timing chain:		
Timing chain No. of links	88 link	----
Timing chain adjustment method	Automatic	----
Valve, valve seat, valve guide:		
Valve clearance (cold) IN	0.05 ~ 0.07 mm (0.0020~ 0.0028 in)	----
EX	0.05 ~ 0.07 mm (0.0020~ 0.0028 in)	----
Valve dimensions:		
		
“A” head diameter IN	27.9 ~ 28.1 mm (1.0984 ~ 1.1062 in)	----
EX	23.4 ~ 23.6 mm (0.8897 ~ 0.9291 in)	----
“B” face width IN	---	----
EX	---	----
“C” seat width IN	0.8 ~ 1.0 mm (0.0314 ~ 0.03937 in)	1.6 mm (0.0630 in)
EX	0.8 ~ 1.0 mm (0.0314 ~ 0.03937 in)	1.6 mm (0.0630 in)
“D” margin thickness IN	----	----
EX	----	----
Stem outside diameter IN	4.970 ~ 4.985 mm(0.19566 ~ 0.1962 in)	4.92 mm (0.1937 in)
EX	4.970 ~ 4.985 mm(0.19566 ~ 0.1962 in)	4.92 mm (0.1937 in)
Guide inside diameter IN	5.000 ~ 5.012 mm(0.1968 ~ 0.1973 in)	5.050 mm(0.1988 in)
EX	5.000 ~ 5.012 mm(0.1968 ~ 0.1973 in)	5.050 mm(0.1988 in)
Stem-to-guide clearance IN	0.015 ~ 0.042 mm(0.0005 ~ 0.0016 in)	0.08 mm(0.003 in)
EX	0.03 ~ 0.057 mm(0.0011 ~ 0.0022 in)	0.10 mm(0.004 in)
Valve spring:		
Free length		
IN /outer(ϕ 22.4)	34.12 mm (1.3433 in)	32.32 mm (1.2724in)
/inner(ϕ 16.1)	31.96 mm (1.2582 in)	30.16 mm (1.2724in)
EX /outer(ϕ 22.4)	34.12 mm (1.3433 in)	32.32 mm (1.2724in)
/inner(ϕ 16.1)	31.96 mm (1.2582 in)	30.16 mm (1.2724in)

MAINTENANCE SPECIFICATIONS

Item	Standard	Limit
Piston:		
Piston to cylinder clearance	0.01 ~ 0.04 mm (0.00039 ~ 0.00157in)	0.1mm(0.004 in)
Piston size “D”	56.975 ~ 56.99 mm (2.2431 ~ 2.2437 in)	----
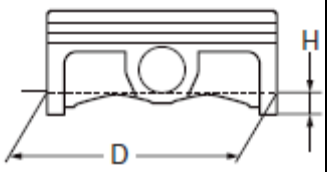		
Measuring point “H”	8 mm (0.31 in)	----
Piston off-set	----	----
Piston pin bore inside diameter	13.002 ~ 13.008 mm (0.5118 ~ 0.5121 in)	13.06 mm (0.5141 in)
Piston pin outside diameter	12.995 ~ 12.998 mm (0.5116 ~ 0.5117 in)	12.97 mm (0.5106 in)
Piston rings:		
Top ring: 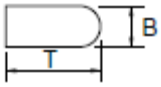		
Dimensions (B × T)	0.8 × 2.25 mm (0.06 × 0.09 in)	
End gap (installed)	0.05 ~ 0.20 mm (0.006 ~ 0.010 in)	0.4 mm (0.020 in)
Side clearance (installed)	0.015 ~ 0.045 mm(0.0012 ~ 0.0026in)	0.10 mm (0.005 in)
2nd ring: 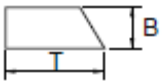		
Dimensions (B × T)	0.8 × 2.25 mm (0.06 × 0.09 in)	
End gap (installed)	0.05 ~ 0.20 mm (0.006 ~ 0.010 in)	0.4 mm (0.031 in)
Side clearance	0.015 ~ 0.045 mm(0.0012 ~ 0.0026in)	0.10 mm (0.005 in)
Oil ring: 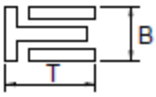		
Dimensions (B × T)	1.50 × 2.25 mm (0.06 × 0.09 in)	----
End gap (installed)	0.2 ~ 0.7 mm (0.004 ~ 0.016 in)	0.9 mm (0.005 in)

MAINTENANCE SPECIFICATIONS

Item	Standard	Limit
Crankshaft:		
Crank width “A”	40.2 mm (1.58267 in)	----
Runout limit “C”	0.03 (one-side)	0.1 mm (0.0039 in)
Big end side clearance “D”	0.1 ~ 0.35 mm (0.0039 ~ 0.0137 in)	0.6 mm (0.0236 in)
Small end free play “F”	----	
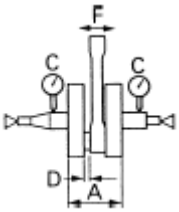		
Clutch:		
Friction plate thickness	2.9 ~ 3.1 mm (0.114 ~ 0.122 in)	2.7 mm (0.106 in)
Quantity	5	----
Clutch plate thickness	0.9 ~ 1.0 mm (0.043 ~ 0.051 in)	0.7 mm (0.0275 in)
Quantity	4	----
Warp limit	----	0.2 mm (0.0787 in)
Clutch spring free length	30.2 mm (1.1889 in)	27.2 mm (1.0705 in)
Quantity	4	----

MAINTENANCE INTERVALS

Item	After break-in (50km)	Every race	Every third (or 500 km)	Every fifth (or 1,000 km)	As required	Remarks
ENGINE OIL						
Replace	●	●				
Inspect					●	
ENGINE VALVES						The engine must be cold. Check the valve seats and valve stems for wear.
Check the valve clearances	●		●			
Inspect			●			
Replace					●	
VALVE SPRINGS						Check the free length and the tilt.
Inspect			●			
Replace					●	
CAMSHAFTS						Inspect the camshaft surface.
Inspect			●			
Replace					●	
TIMING CHAIN SPROCKETS, TIMING CHAIN						Check for wear on the teeth and for damage.
Inspect			●			
Replace					●	
PISTON						Inspect crack Inspect carbon deposits and eliminate them.
Inspect			●		●	
Clean					●	
Replace					●	

MAINTENANCE INTERVALS

Item	After break-in (50km)	Every race	Every third (or 500 km)	Every fifth (or 1,000 km)	As requir e-ed	Remarks
PISTON RING						Check ring end gap
Inspect			●			
Replace			●		●	
PISTON PIN						
Inspect			●			
Replace					●	
CYLINDER HEAD						Inspect carbon deposits and eliminate them. Change gasket
Inspect and clean			●			
Replace					●	
CYLINDER						Inspect score marks Inspect wear
Inspect and clean			●			
Replace					●	
CLUTCH						Inspect housing, friction plate, clutch plate and spring
Inspect and adjust	●	●				
Replace					●	
TRANSMISSION						Inspect wear of gear and bearings
Inspect				●		
Replace					●	
SHIFT FORK, SHIFT CAM, GUIDE BAR						Inspect wear
Inspect				●		
Replace					●	
ROTOR NUT						
Retighten	●			●		
CRANK						
Inspect and align				●	●	
CARBURETOR						
Inspect, adjust, clean	●	●				

MAINTENANCE INTERVALS

Item	After break-in (50km)	Every race	Every third (or 500 km)	Every fifth (or 1,000 km)	As requir e-ed	Remarks
SPARK PLUG						
Inspect and clean	●		●			
Replace					●	
OIL COOLING SYSTEM(Option)						
Check hoses & leakage	●	●				
Replace hoses and gaskets					●	
AIR FILTER (Option)						Use foam air-filter oil or equivalent oil
Clean and lubricate	●	●				
Replace					●	
OIL FILTER						
Replace	●	●				
OIL STRAINER						
Clean				●		

PRE-OPERATION INSPECTION AND MAINTENANCE

Before riding for break-in operation, practice or a race, make sure the engine is in good operating condition.

Before using this engine, check the following points.

ENGINE OIL LEVEL INSPECTION

1. Start the engine, warm it up for several minutes, and then turn off the engine and wait for a few minutes.
2. Place the bike on a level place and hold it up on upright position.
3. Check the oil level through the sight glass.
   Oil level should be between the upper and the red-colored central point of the sight glass.

4. Add oil to proper level

PRE-OPERATION INSPECTION AND MAINTENANCE

CARBURETOR SETTING

The carburetor is extremely sensitive to foreign matter (dirt, sand, water, etc.).
During installation, do not allow foreign matter to get into the carburetor.
Always handle the carburetor and its components carefully. Even slight scratches, bends or damage to carburetor parts may prevent the carburetor from functioning correctly.
Carefully perform all servicing with the appropriate tools and without applying excessive force.
After installing the carburetor, check that the throttle operates correctly and opens and closes smoothly.
It is highly recommended that the carburetor setting is performed by an experienced mechanic to obtain the best possible performance.

Atmospheric conditions and carburetor settings

Air Temp.	Humidity	Air Pressure (Altitude)	Mixture	Setting
High	High	Low (High)	Richer	Leaner
Low	Low	High (Low)	Leaner	Richer

The air density (i.e., concentration of oxygen in the air) determines the richness or leanness of the air/fuel mixture. Therefore, refer to the above table for mixture settings.
That is:

- Higher temperature expands the air with its resultant reduced density.
- Higher humidity reduces the amount of oxygen in the air by so much of the water vapor in the same air.
- Lower atmospheric pressure (at a high altitude) reduces the density of the air.

PRE-OPERATION INSPECTION AND MAINTENANCE

Effects of the setting parts on the throttle valve opening

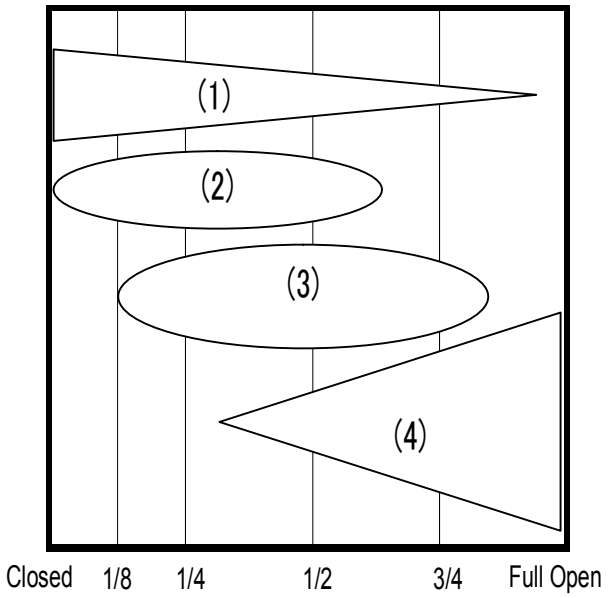

(1) Slow Jet / Pilot Screw
(2) Throttle valve cutaway
(3) Jet Needle / Needle Jet
(4) Main Jet

Here is the recommended setting information of KEIHIN PE28 carburetor, for your reference.

Tested Conditions

Carburetor	KEIHIN PE28
Air Temperature	20 degrees Celsius
Humidity	50%
Atmospheric Pressure	1000 hPa

Item	Recommendation
Main Jet	#122-#125 (with AIR FILTER) / #130-#132(without Air Filter)
Slow Jet	#38 (STD)
Throttle Valve	#3.0
Jet Needle	#JFN (STD) Clip position : In the 1st groove from the top
Air screw	1 + 1/2 return

PRE-OPERATION INSPECTION AND MAINTENANCE

IGNITION TIMING SELECTION

DAYTONA 150E ENGINE comes with ignition timing selectable CDI unit.

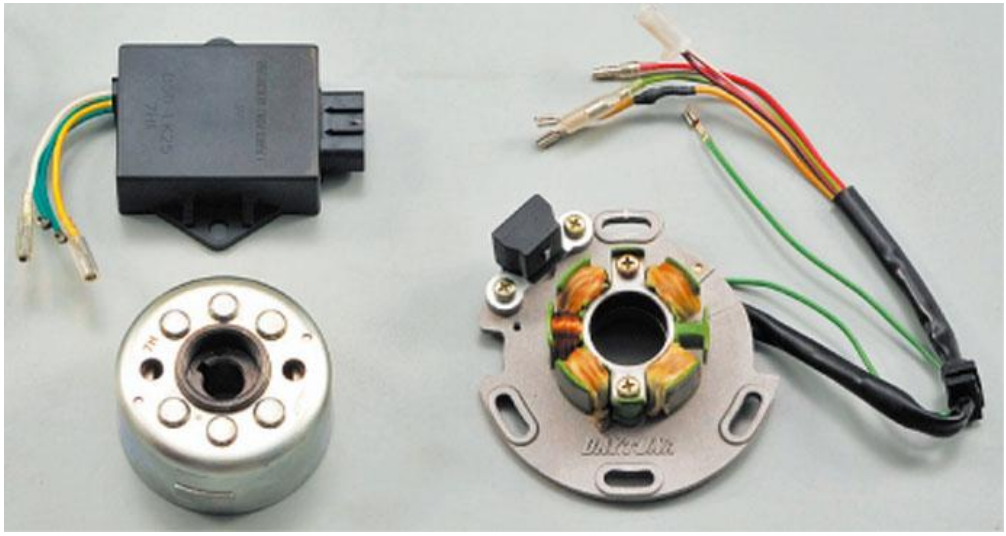

To change the ignition timing, it needs to change the connection of the wires that come out of the CDI unit.

WIRE CONNECTION TABLE

Color of Wire	WHITE	GREEN	YELLOW	GREEN	Remarks
Timing (1)	○	○	○	○	Factory Default Setting No wires to be connected
Timing (2)	○ ━	━ ○	○	○	
Timing (3)	○	○	○ ━	━ ○	
Timing (4)	○ ━	━ ○	○ ━	━ ○	

WARNING
DO NOT SELECT TIMING (3) OR (4) FOR DAYTONA 150E ENGINE.
SERIOUS DAMAGE WILL OCCURE IN THE ENGINE BY ABNORMAL COMBUSTION.

Notes

(a) Timing (1) gives more torque at low-middle rpm level.

(b) Timing (2) gives more torque at higher rpm level than the Timing (2).

Example (How to select)

* To select Timing (2), connect White and Green wires.

PRE-OPERATION INSPECTION AND MAINTENANCE

ENGINE OIL TEMPERATURE CONTROL

WARNING

Engine oil temperature is to be strictly controlled at 90 degrees Celsius (194 degrees Fahrenheit) or lower.

Serious damage will occur in the engine if engine oil temperature exceeds 90 degrees Celsius or 194 degrees Fahrenheit.

It is solely customer's responsibility to control the engine oil temperature.

Any failures caused by overheating are NOT considered as the defects of Products.

It is highly recommended to use HIGH-EFFICIENT OIL COOLER and OIL TEMPERATURE GAUGE to protect the engine.

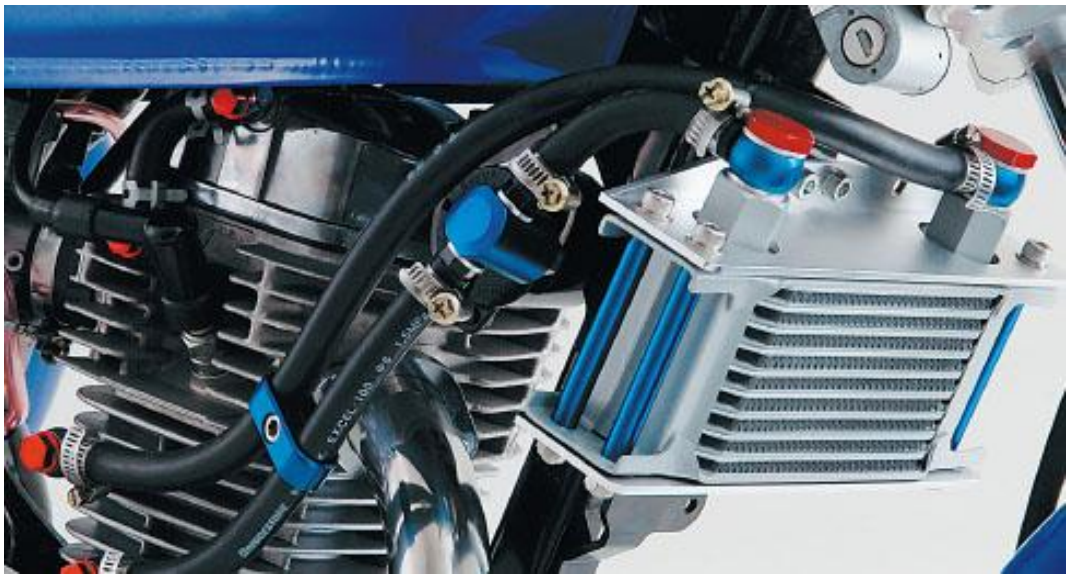

The above OIL COOLER is just a recommendation.

Engine oil temperature can be heated up over 90 degrees Celsius or 194 degrees Fahrenheit, even if the above recommended OIL COOLER is used.

Again, customer needs to control the oil temperature very carefully.

ELECTRICAL DIAGRAM

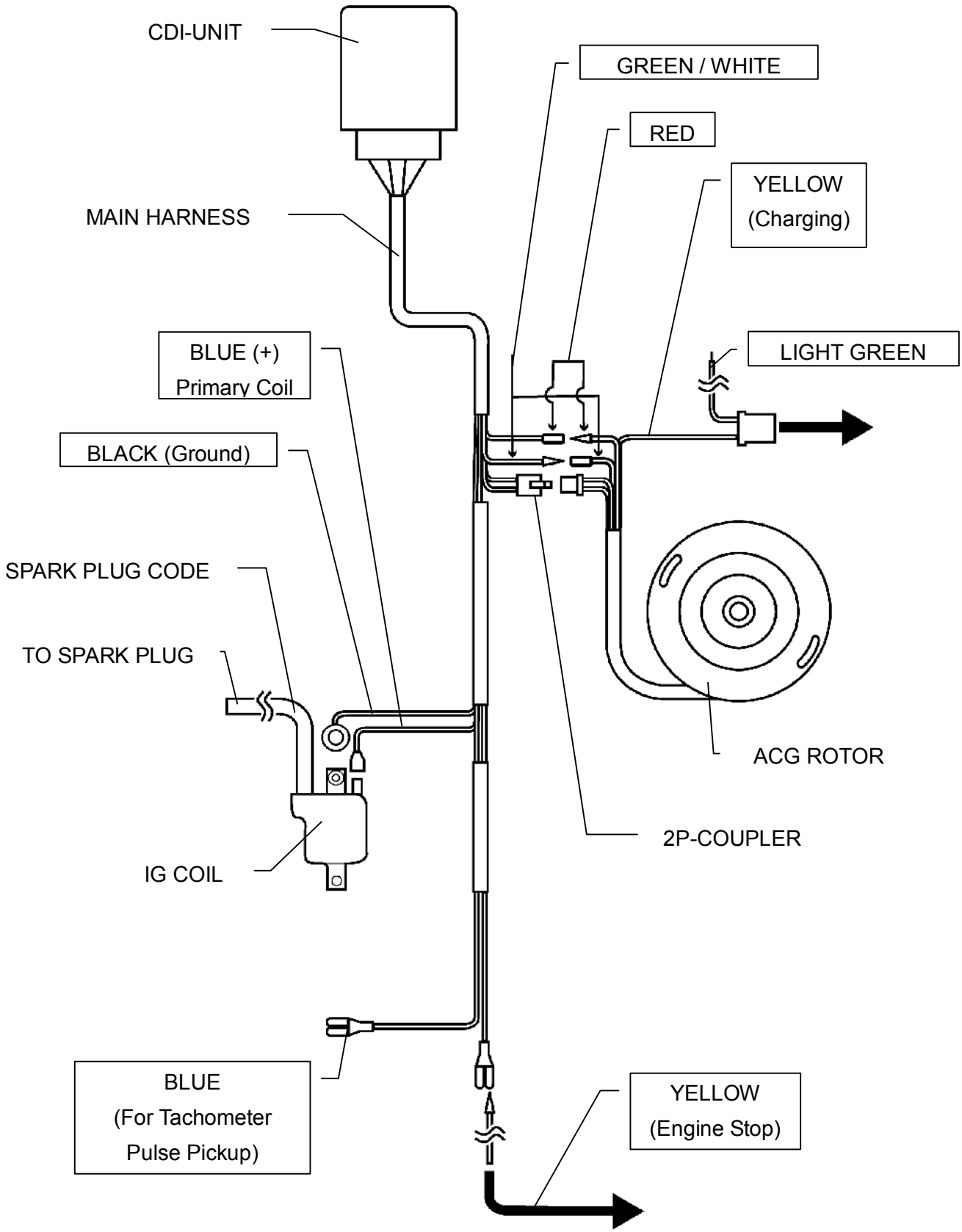

OPTIONAL PARTS

OIL COOLER

The following oil coolers are available from Daytona, but the mount bracket must be made by the customer to fit on his/her bike. The kit components are shown in the below photo.

Daytona Part# 61785

7-Core Oil Cooler Kit

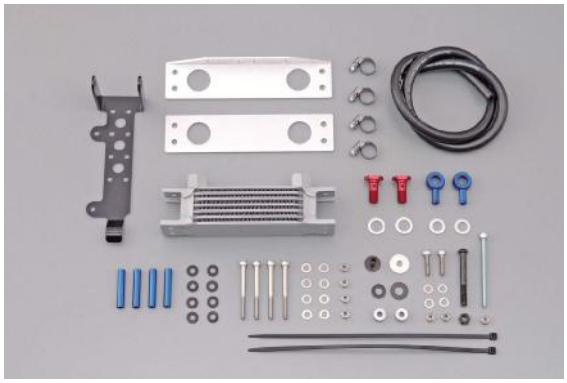

Daytona Part# 62759

10-Core Oil Cooler Kit

(The same kit components as #61785.)

OIL TEMPERATURE GAUGE & FITTING

The following temp. gauge and fitting are available from Daytona. The temp. gauge (#47101) can be used with the Daytona oil cooler (#61785) by using the Daytona sensor fitting (#43350).

Daytona Part# 47101

Temp. gauge & sensor, 0-150 degrees Celsius

PT1/8(Tapered Thread)-Sensor fitting

Daytona Part# 43350

Sensor fitting

For PT1/8(Tapered Thread) sensor

Designed for a 8mm inner dia. oil hoses

OPTIONAL PARTS

REINFORCED CLUTCH FRICTION DISC

Daytona Part # 84749

Reinforced clutch friction disc, 1pc

Made by FCC JAPAN

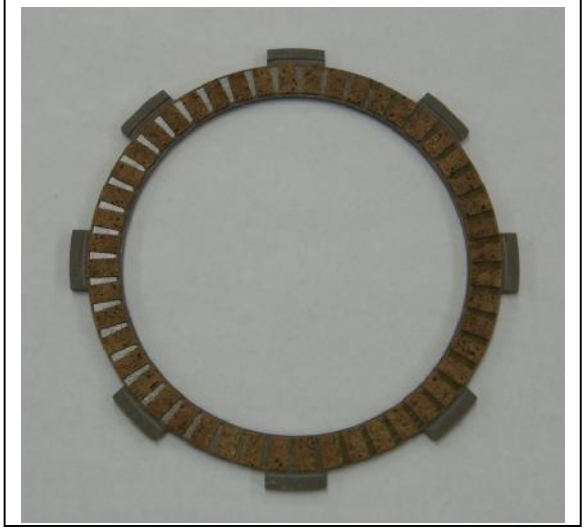

REINFORCED CAM CHAIN

Daytona Part # 84750

Reinforced cam chain, 88 Link 25HS

Solid Bushing

Made in Japan

WARNING

Since these UPGRADE KIT PARTS are designed specifically for the top competition riders, ANY FAILURES CAUSED BY THE INSTALLATION OF THESE OPTIONAL PARTS ARE NOT CONSIDERED AS THE DEFECTS OF PRODUCTS.

CARBURETOR KEIHIN PE28

Daytona Part # 85707 (with Throttle valve #3.0) *Recommendation

Daytona Part # 83952 (with Throttle valve #2.0)

Keihin PE28 Carburetor

OPTIONAL PARTS

CARBURETOR SETTING PARTS

Daytona Part # 31123

Main Jet Set (8 pcs/set) for Keihin

#115,118,120,122,125,128,130,&132

Daytona Part # 31124

Main Jet Set (8 pcs/set) for Keihin

#128,130,132,135,138,140,142,&145

Daytona Part # 69906

Slow Jet Set, 6pcs/set

Air bleed type

For Keihin PE & PWK

#35, 38, 40, 42, 45, & 48

Daytona Part # 65414

JET NEEDLE

#69359 / 46JFL (+2 / Diameter of straight ϕ2.465 / RICH)

#69361 / 46JFM (+1 / ϕ2.475)

#69374 / 46JFN (0 / ϕ2.485 / STD)

#69376 / 46JFP (-1 / ϕ2.495)

#69414 / 46JFQ (-2 / ϕ2.505)

#69378 / 46JFR (-3 / ϕ2.515)

#69380 / 46JFS (-4 / ϕ2.525 / LEAN)

*Angle of taper = 3 deg (all)

* Height to taper = 26.77mm(all)

Daytona Part No.

Throttle valve / For PE28

 # 65416 (# 2.0)

 # 69353 (# 2.5)

 # 69354 (# 3.0)

 # 69355 (# 4.0)

UPGRADE KIT PARTS

WARNING

Since these UPGRADE KIT PARTS are designed specifically for the top competition riders, ANY FAILURES CAUSED BY THE INSTALLATION OF THESE OPTIONAL PARTS ARE NOT CONSIDERED AS THE DEFECTS OF PRODUCTS.

HI-COMP PISTON 2V – DT150

Daytona Part # 85043

Compression ratio 13.8 : 1 (Std = 12.5:1)

CAM SHAFT UPGRADE

Daytona Part # 84835

(A053 type / two lines)

A053 CAM Angle = 268deg / lift in = 8.67mm , ex = 8.52

(std CAM = Angle = 240deg / lift in = 7.23mm , ex = 6.81)

UPGRADE KIT PARTS

WARNING

Since these UPGRADE KIT PARTS are designed specifically for the top competition riders, ANY FAILURES CAUSED BY THE INSTALLATION OF THESE OPTIONAL PARTS ARE NOT CONSIDERED AS THE DEFECTS OF PRODUCTS.

DOHC CYLINDER HEAD AND CYLINDER KIT

This upgrade kit soups up DAYTONA 150E SOHC ENGINE to the next level of high performance.

Daytona Part #84427

Twin Cam Cylinder Head Kit with Cylinder and Piston

UPGRADE KIT PARTS

WARNING

Since these UPGRADE KIT PARTS are designed specifically for the top competition riders, ANY FAILURES CAUSED BY THE INSTALLATION OF THESE OPTIONAL PARTS ARE NOT CONSIDERED AS THE DEFECTS OF PRODUCTS.

DAYTONA 150E ENGINE with Twin Cam Head Kit (#84427)

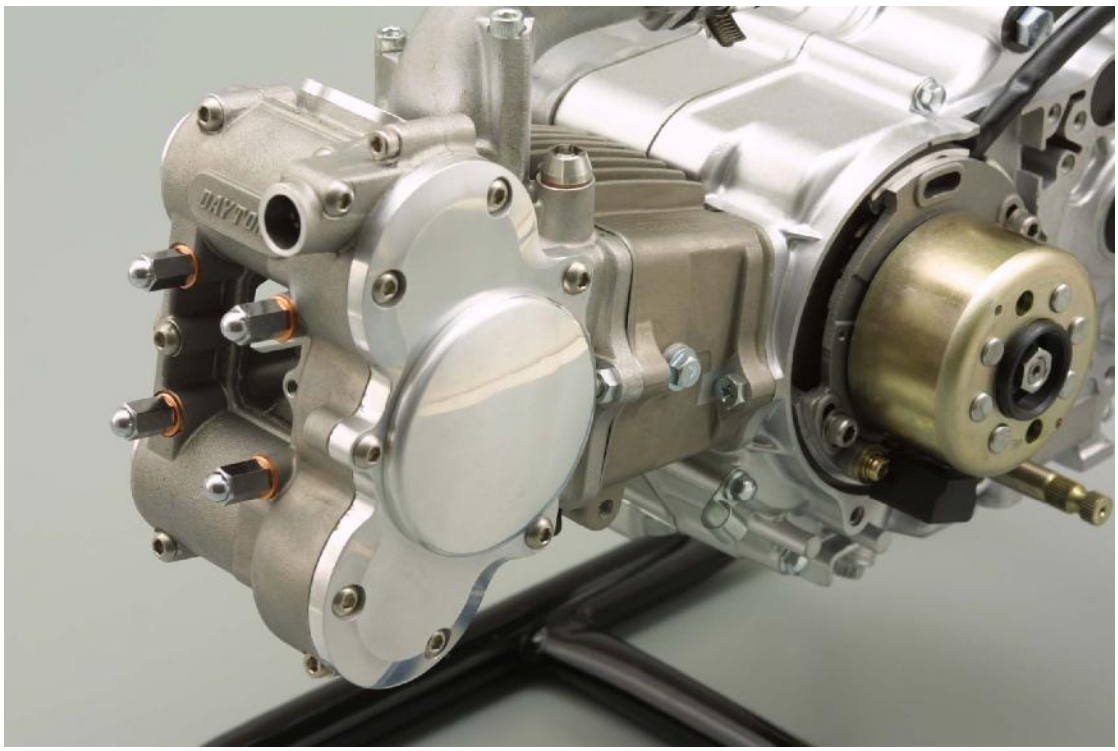

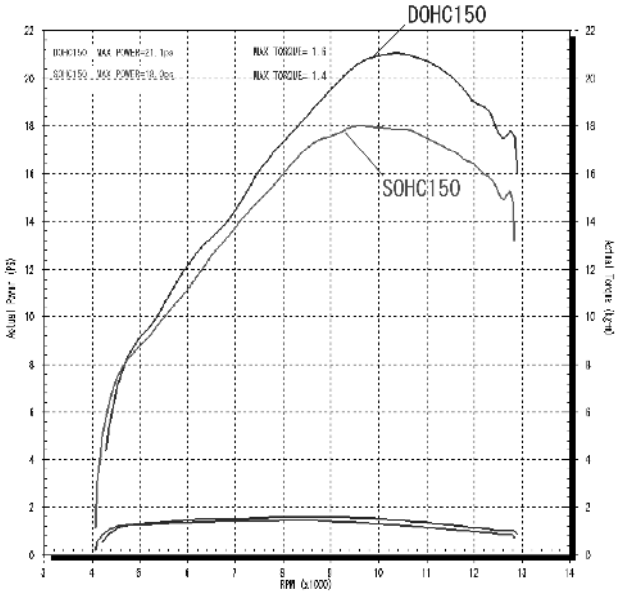

DAYTONA 150E ENGINE
Owner's Manual

INTRODUCTION

Félicitations, vous venez d'acquérir votre nouveau moteur DAYTONA 150E.
Ce manuel explique le fonctionnement, l'inspection, l'entretien de base et de réglage du moteur. Pour toutes questions, veuillez contacter votre revendeur. Merci de lire attentivement et minutieusement ce manuel avant utilisation.

ATTENTION

5. Le moteur DAYTONA 150E est exclusivement destiné à la COMPETITION SUR CIRCUIT FERME. L'utilisation de ce moteur sur la voie publique ou sur un terrain ouvert au public est strictement interdite par les lois en vigueur.
   Veuillez observer toutes les lois et règlements applicables avant utilisation.
6. Ce moteur ne peut être utilisé que par UN PILOTE EXPERIMENTE.
   Un accident fatal pourrait survenir si vous n'êtes pas un pilote expérimenté et si le moteur n'est pas entretenu par un mécanicien expérimenté.
7. Ce moteur doit être entretenu et vérifié par un mécanicien professionnel.
   De sérieux dommages pourraient être occasionnés si tel n'est pas le cas.
8. Ce manuel explique SEULEMENT les opérations de base, le contrôle, l'entretien et le réglage mais il incombe à l'utilisateur de maintenir le meilleur niveau de performance du moteur en fonction des circonstances.

RESPONSABILITE DU CLIENT & SERVICE APRES VENTE

EXCLUSIONS GENERALES

Tous les dommages causes par les raisons suivantes ne seront pas considérés comme étant des vices de fabrication:

(8) Surchauffe suite un contrôle déficient de la température d'huile moteur.

LA TEMPERATURE DE L HUILE MOTEUR DOIT ETRE CONTROLEE ET MAINTENUE AU PLUS A 90°c (194 DEGRES FAHRENHEIT).

Le moteur pourrait subir de sérieux dommages si la température d'huile excède les 90°c ou 194° Fahrenheit.

Le contrôle de la température incombe entièrement à l'utilisateur.

(9) Installation de pièces ou accessoires qui ne sont pas d'origine.
Ceci inclut les pièces Racing Daytona réservées à la compétition telles que la culasse 4 soupapes.

(10) Contraintes anormales, négligence ou abus

(11) Accidents ou dommages suite à une collision

(12) Modification des pièces d'origine

(13) Manque d'entretien

(14) Dommages causés par une utilisation incorrecte

LA RESPONSABILITE DU CLIENT

IL SERA DE LA RESPONSABILITE DU CLIENT d'utiliser et entretenir le moteur comme indiqué dans ce manuel.

SERVICE APRES VENTE

Si le moteur nécessite une intervention, contactez uniquement votre revendeur agréé Daytona par le distributeur.

DAYTONA Corp. JAPAN n'est pas en position d'assurer le service après vente suite au contrat conclu avec le distributeur.

DAYTONA 150E ENGINE
Owner's Manual

TABLE DES MATIERES

DESIGNATION DES PIECES

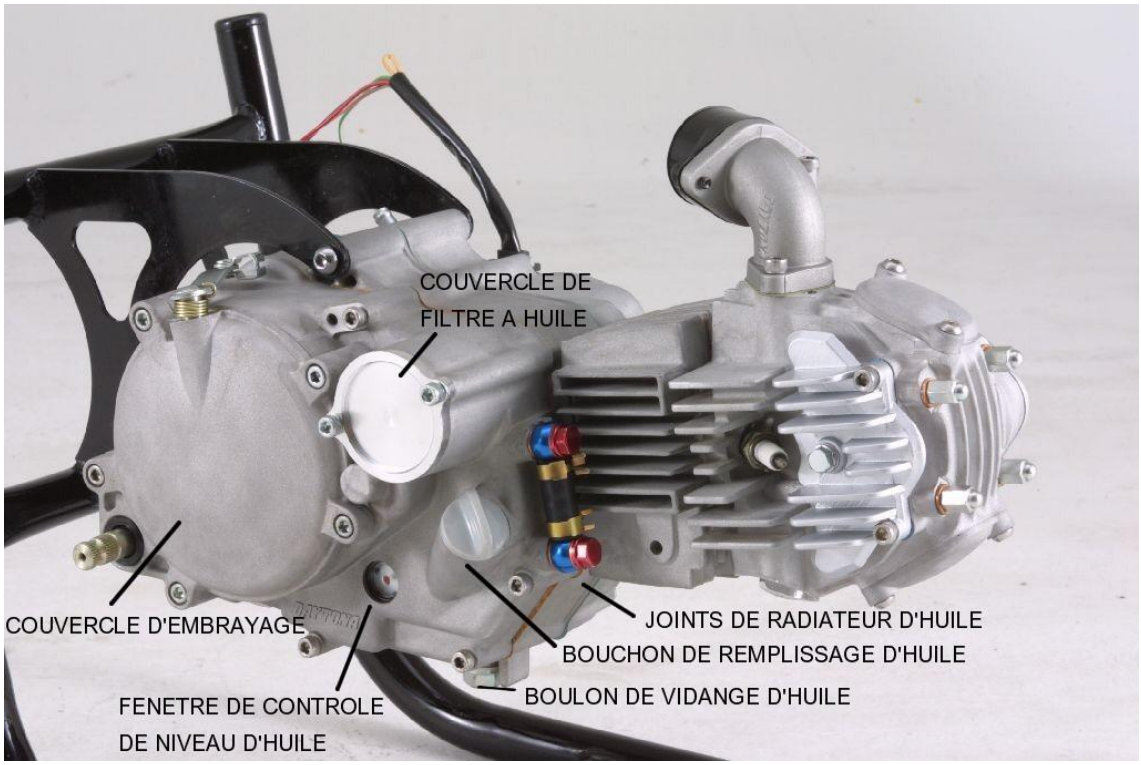

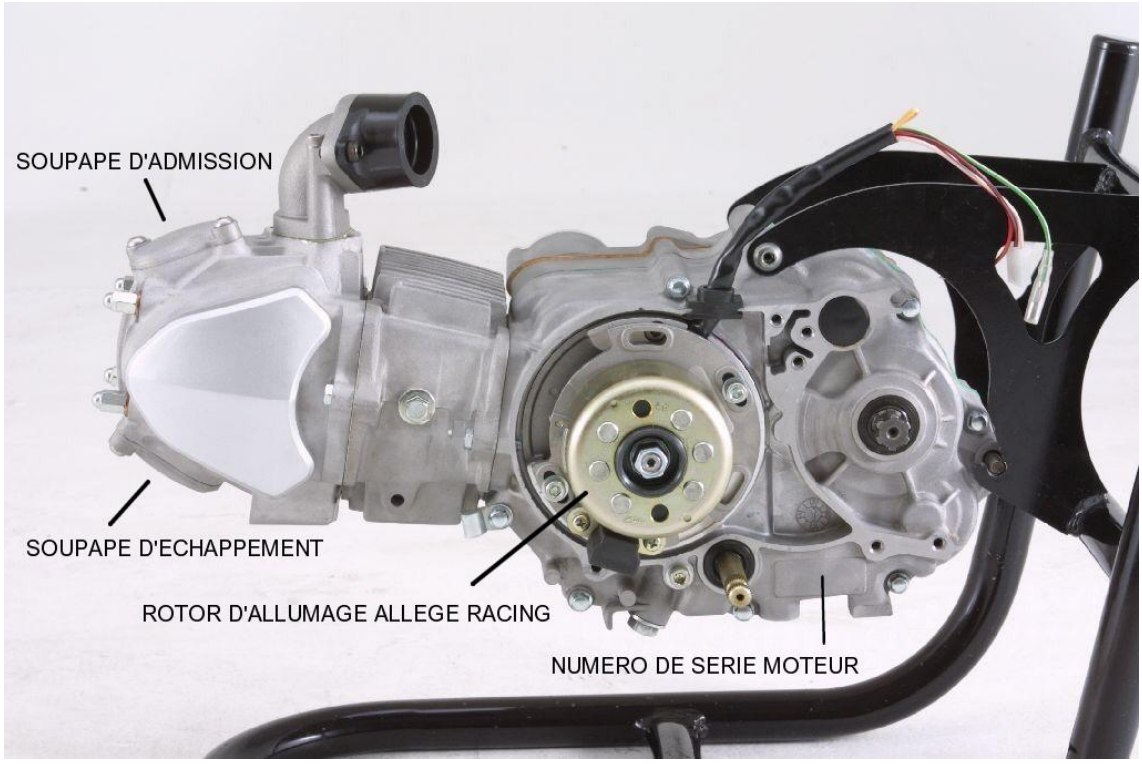

CARACTERISTIQUES GENERALES

MOTEUR	
POIDS (à sec)	18.0 kg
type	4 temps SOHC refroidissement à huile
Cylindre	Mono cylindre, monté horizontalement
Cylindrée	149.78 cm3
Alésage × Course	57.0 × 58.7 mm (2.244 × 2.311 in)
Taux de Compression	12.5 : 1
Démarrage	Kick (Kick non inclus)
Type de lubrification	Carter humide
Huile moteur recommandée	SAE 10W-40 ou indice supérieur API “SG” or ou indice supérieur
Capacité huile moteur	
Vidange	0.60 L
Avec remplacement du filtre	0.65 L
Total	0.70 L
	* capacité d’huile à adjuster / radiateur d’huile
Bougie	
Type/Fabriquant	CR8HSA/NGK (à resistance)
Ecartement	0.7 ~ 0.8 mm (0.028 ~ 0.031 in)
Embrayage	Humide, 5 disques
Transmission	
Rapport de réduction primaire	67/18 (3.722)
Type	4-vitesses N-1-2-3-4
Rapports	
1	34/13 (2.6153)
2	29/17 (1.7058)
3	26/20 (1.3000)
4	24/23 (1.0434)
Parties éléctriques	
Allumage	AC-CDI

Item	Standard	Limit
Cylinder head Warp limit 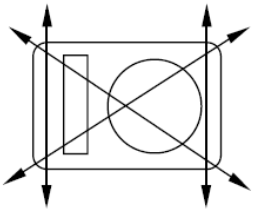	 ----	0.05 mm (0.002 in)
Cylinder: Bore size Out of round limit	 57.00 - 57.015mm (2.2441 – 2.2445) ----	 ---- 0.05 mm (0.002 in)
Camshaft: Drive method Cam dimensions 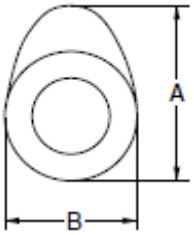 Intake “A” “B” Exhaust “A” “B” 	 Chain (Left) 26.49 – 26.61 mm (1.04291 – 1.0476 in) ---- ---- 26.23 ~ 26.35 mm (1.0326 ~ 1.0374in) ---- ----	 ---- 26.15 mm (1.0295 in) ---- ---- 25.89 mm (1.0192 in) ---- ----

CARACTERISTIQUES / ENTRETIEN

Item	Standard	Limit
Timing chain:		
Timing chain No. of links	88 link	----
Timing chain adjustment method	Automatic	----
Valve, valve seat, valve guide:		
Valve clearance (cold) IN	0.05 ~ 0.07 mm (0.0020~ 0.0028 in)	----
EX	0.05 ~ 0.07 mm (0.0020~ 0.0028 in)	----
Valve dimensions:		
		
“A” head diameter IN	27.9 ~ 28.1 mm (1.0984 ~ 1.1062 in)	----
EX	23.4 ~ 23.6 mm (0.8897 ~ 0.9291 in)	----
“B” face width IN	---	----
EX	---	----
“C” seat width IN	0.8 ~ 1.0 mm (0.0314 ~ 0.03937 in)	1.6 mm (0.0630 in)
EX	0.8 ~ 1.0 mm (0.0314 ~ 0.03937 in)	1.6 mm (0.0630 in)
“D” margin thickness IN	----	----
EX	----	----
Stem outside diameter IN	4.970 ~ 4.985 mm(0.19566 ~ 0.1962 in)	4.92 mm (0.1937 in)
EX	4.970 ~ 4.985 mm(0.19566 ~ 0.1962 in)	4.92 mm (0.1937 in)
Guide inside diameter IN	5.000 ~ 5.012 mm(0.1968 ~ 0.1973 in)	5.050 mm(0.1988 in)
EX	5.000 ~ 5.012 mm(0.1968 ~ 0.1973 in)	5.050 mm(0.1988 in)
Stem-to-guide clearance IN	0.015 ~ 0.042 mm(0.0005 ~ 0.0016 in)	0.08 mm(0.003 in)
EX	0.03 ~ 0.057 mm(0.0011 ~ 0.0022 in)	0.10 mm(0.004 in)
Valve spring:		
Free length		
IN /outer(ϕ 22.4)	34.12 mm (1.3433 in)	32.32 mm (1.2724in)
/inner(ϕ 16.1)	31.96 mm (1.2582 in)	30.16 mm (1.2724in)
EX /outer(ϕ 22.4)	34.12 mm (1.3433 in)	32.32 mm (1.2724in)
/inner(ϕ 16.1)	31.96 mm (1.2582 in)	30.16 mm (1.2724in)

CARACTERISTIQUES / ENTRETIEN

Item	Standard	Limit
Piston:		
Piston to cylinder clearance	0.01 ~ 0.04 mm (0.00039 ~ 0.00157in)	0.1mm(0.004 in)
Piston size “D”	56.975 ~ 56.99 mm (2.2431 ~ 2.2437 in)	----
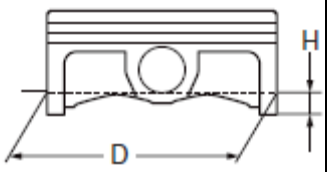		
Measuring point “H”	8 mm (0.31 in)	----
Piston off-set	----	----
Piston pin bore inside diameter	13.002 ~ 13.008 mm (0.5118 ~ 0.5121 in)	13.06 mm (0.5141 in)
Piston pin outside diameter	12.995 ~ 12.998 mm (0.5116 ~ 0.5117 in)	12.97 mm (0.5106 in)
Piston rings:		
Top ring: 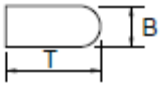		
Dimensions (B × T)	0.8 × 2.25 mm (0.06 × 0.09 in)	
End gap (installed)	0.05 ~ 0.20 mm (0.006 ~ 0.010 in)	0.4 mm (0.020 in)
Side clearance (installed)	0.015 ~ 0.045 mm(0.0012 ~ 0.0026in)	0.10 mm (0.005 in)
2nd ring: 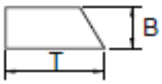		
Dimensions (B × T)	0.8 × 2.25 mm (0.06 × 0.09 in)	
End gap (installed)	0.05 ~ 0.20 mm (0.006 ~ 0.010 in)	0.4 mm (0.031 in)
Side clearance	0.015 ~ 0.045 mm(0.0012 ~ 0.0026in)	0.10 mm (0.005 in)
Oil ring: 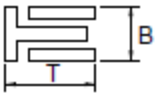		
Dimensions (B × T)	1.50 × 2.25 mm (0.06 × 0.09 in)	----
End gap (installed)	0.2 ~ 0.7 mm (0.004 ~ 0.016 in)	0.9 mm (0.005 in)

CARACTERISTIQUES / ENTRETIEN

Item	Standard	Limit
Crankshaft:		
Crank width “A”	40.2 mm (1.58267 in)	----
Runout limit “C”	0.03 (one-side)	0.1 mm (0.0039 in)
Big end side clearance “D”	0.1 ~ 0.35 mm (0.0039 ~ 0.0137 in)	0.6 mm (0.0236 in)
Small end free play “F”	----	
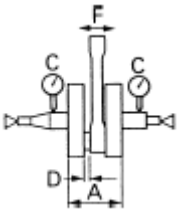		
Clutch:		
Friction plate thickness	2.9 ~ 3.1 mm (0.114 ~ 0.122 in)	2.7 mm (0.106 in)
Quantity	5	----
Clutch plate thickness	0.9 ~ 1.0 mm (0.043 ~ 0.051 in)	0.7 mm (0.0275 in)
Quantity	4	----
Warp limit	----	0.2 mm (0.0787 in)
Clutch spring free length	30.2 mm (1.1889 in)	27.2 mm (1.0705 in)
Quantity	4	----

CALENDRIER D'ENTRETIEN

	Après 50kms	Chaque course	3 courses (ou 500 kms)	5 courses (ou 1,000 kms)	Si nécessaire	Remarques
HUILE MOTEUR						
Vidanger	●	●				
Contrôler					●	
Soupapes						Le moteur doit être froid. Vérifiez l'usure des sièges et des queues de soupape.
Contrôler	●		●			
Jeu						
Démonter			●			
Remplacer					●	
Ressorts de soupape						Vérifier la longueur libre et l'inclinaison.
Contrôler			●			
Remplacer					●	
Arbre à cames						Contrôler la surface.
Contrôler			●			
Remplacer					●	
Chaine de distribution, pignons						Vérifier l'usure des dents et les dommages éventuels.
Contrôler			●			
Remplacer					●	
PISTON						Vérifier si pas de fissures, contrôler les dépôts et éliminer si nécessaire.
Contrôler			●		●	
Nettoyer					●	
Remplacer					●	

CALENDRIER D'ENTRETIEN

	Après 50kms	Chaque course	3 courses (ou 500 kms)	5 courses (ou 1,000 kms)	Si nécessaire	Remarques
SEGMENTS PISTON						
Contrôler			●			
Remplacer			●		●	
AXE DE PISTON						
Contrôler			●			
Remplacer					●	
CULASSE						Contrôler et éliminer les dépôts de carbone. Changer le joint
Contrôler et nettoyer			●			
Remplacer					●	
CYLINDRE						Contrôler l'usure
Contrôler et nettoyer			●			
Remplacer					●	
EMBRAYAGE						
Contrôler et régler	●	●				
Remplacer					●	
TRANSMISSION						Contrôler l'usure des roulements,…
Contrôler				●		
Remplacer					●	
Fourchette de sélection,…						Contrôler l'usure
Contrôler				●		
Remplacer					●	
Ecrou de rotor						
Vérifier le serrage	●			●		
VILLEBREQUIN						
Contrôler et aligner				●	●	
CARBURATEUR						
Contrôler,adjuster et nettoyer	●	●				

CALENDRIER D'ENTRETIEN

	Après 50kms	Chaque course	3 courses (ou 500 kms)	5 courses (ou 1,000 kms)	Si néces saire	Remarques
BOUGIE Contrôler et nettoyer Remplacer	●		●		●	
Radiateur d'huile(Option) Vérifier les durites & les fuites Remplacer les durites et les joints	●	●			●	
Filtre à air (Option) Nettoyer et lubrifier Remplacer	●	●			●	Utiliser de l'huile spéciale filtre à air.
Filtre à huile Remplacer	●	●				
Tamis de filter à huile Nettoyer				●		

CONTROLE AVANT UTILISATION ET ENTRETIEN

Avant toute utilisation, assurez-vous que le moteur soit en bonne état de marche.

Avant d'utiliser ce moteur, contrôlez les points suivants:

CONTROLE DU NIVEAU D'HUILE MOTEUR

5. Démarrez le moteur, laissez le chauffer quelques minutes, puis arrêter le moteur et attendez quelques minutes.
6. Placez la moto sur un sol plat et maintenez la droite.
7. Contrôlez le niveau d'huile au travers de la fenêtre de contrôle.
   Le niveau d'huile doit se situer entre le repère haut et le point rouge au milieu de la fenêtre.

8. Ajouter de l'huile si nécessaire (Huile préconisée)

CONTROLE AVANT UTILISATION ET ENTRETIEN

REGLAGES DU CARBURATEUR

Le carburateur est extrêmement sensible à l'environnement (saleté, sable, eau, etc.).
Durant l'installation, empêcher tout corps étranger de pénétrer dans le carburateur.
Manipulez toujours avec précaution le carburateur et ses éléments. De petites égratignures, même insignifiantes ou tout dommage pourraient empêcher le bon fonctionnement du carburateur.
Effectuez toutes les opérations d'entretien avec précaution en utilisant les outils adéquates et sans appliquer une force excessive.

Après avoir installé le carburateur, vérifiez que la commande d'accélérateur fonctionne correctement et que le moteur accélère ou ralenti progressivement.
Il est fortement recommandé de faire régler le carburateur par un mécanicien expérimenté pour obtenir les meilleures performances possibles.

Conditions atmosphériques et réglages du carburateur

Temp. air	Humidité	Pression atmosp. (Altitude)	Mélange	réglages
Elevée	Haute	Basse (Haute)	+ riche	+ pauvre
Basse	Basse	Haute (Basse)	+ pauvre	+ riche

La densité de l'air (i.e., concentration d'oxygène dans l'air) détermine the richesse ou la pauvreté du mélange air/essence. Par conséquent, référez-vous à la table de réglages ci-dessus pour ajuster le mélange.

- Plus la température augmente, plus la densité de l'air sera faible.
- Plus le niveau d'humidité est élevé, moins la quantité d'oxygène dans l'air sera élevée.
- Plus la pression atmosphérique sera basse (haute altitude), plus la densité de l'air sera faible.

CONTROLE AVANT UTILISATION ET ENTRETIEN

Effets des différentes pièces de réglages sur l'ouverture de la commande d'accélérateur

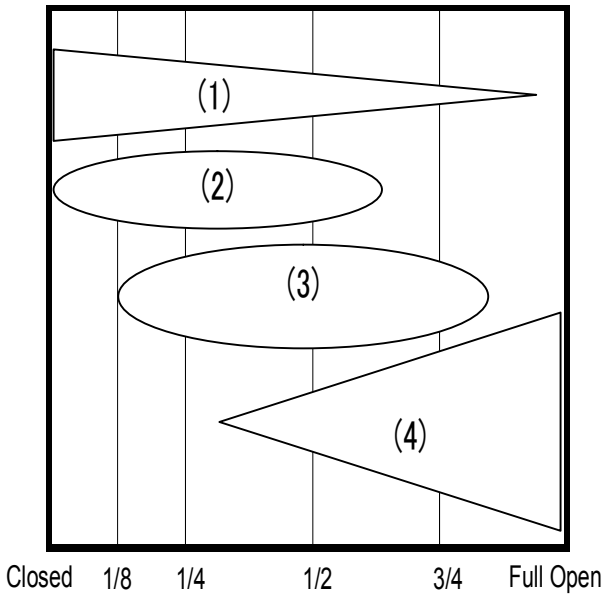

(1) Slow Jet / Pilot Screw
(2) Throttle valve cutaway
(3) Jet Needle / Needle Jet
(4) Main Jet

Ici vous trouverez les réglages recommandés pour utiliser le carburateur Keihin PE28, pour votre référence.

Conditions des tests

Carburateur	KEIHIN PE28
Température de l'air	20° Celsius
Humidité	50%
Pression atmosphérique	1000 hPa

Item	Recommendation
Gicleur principal	#122-#125 (with AIR FILTER) / #130-#132(without Air Filter)
Gicleur de ralenti	#38 (STD)
Throttle Valve	#3.0
Aiguille	#JFN (STD) Clip position : In the 1st groove from the top
Air screw	1 + 1/2 return

CONTROLE AVANT UTILISATION ET ENTRETIEN

Le moteur DAYTONA 150 E est livré avec un CDI à 4 courbes d'allumage sélectionnables.

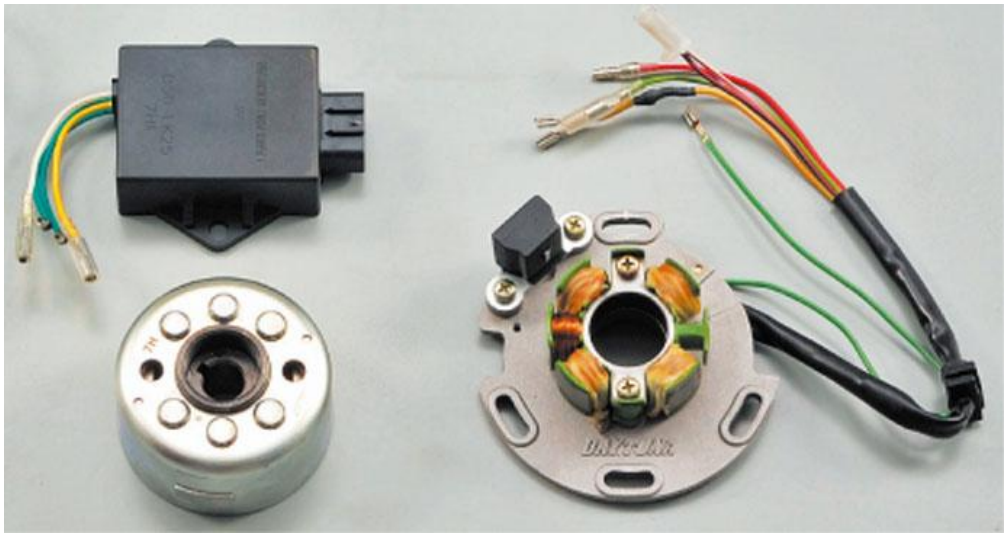

Pour modifier la courbe d'allumage, il existe quatre combinaisons possibles de branchement des fils à la sortie du CDI.

TABLE DE CONNEXION DES FILS

Couleur du fil	BLANC	VERT	JAUNE	VERT	Remarques
Courbe (1)	○	○	○	○	Courbe d'allumage par défaut Pas de fils connectés
Courbe (2)	○ —	— ○	○	○	
Courbe (3)	○	○	○ —	— ○	
Courbe (4)	○ —	— ○	○ —	— ○	

ATTENTION :

NE PAS UTILISER LA COURBE (3) ET (4) AVEC LE MOTEUR DAYTONA 150E.

UNE COMBUSTION ANORMALE CAUSERAIT DE SERIEUX DOMMAGES AU MOTEUR.

Notes

(a) Courbe (1) procure plus de couple sur les deux premiers tiers de la courbe.

(b) Courbe (2) procure davantage de couple sur le dernier tiers de la courbe par rapport à la courbe 1.

Exemple (comment sélectionner une courbe)

* Pour sélectionner la courbe (2), connectez les fils Blanc et vert.

CONTROLE AVANT UTILISATION ET ENTRETIEN

CONTROLE DE LA TEMPERATURE D'HUILE

ATTENTION

La température d'huile moteur doit être contrôlée et ne pas dépasser 90° Celsius (194 degrés Fahrenheit).

De sérieux dommages peuvent être occasionnés si la température du moteur excède 90° Celsius ou 194° Fahrenheit.

Le contrôle de la température incombe totalement à l'utilisateur, Daytona ou son distributeur ne pourra être tenu responsable en cas de dommages.

TOUT DOMMAGE CAUSE PAR UNE SURCHAUFFE NE POURRA ETRE ASSIMILE A UN VICE DE FABRICATION.

Il est fortement recommandé d'utiliser un radiateur d'huile très performant and une jauge de température pour protéger le moteur.

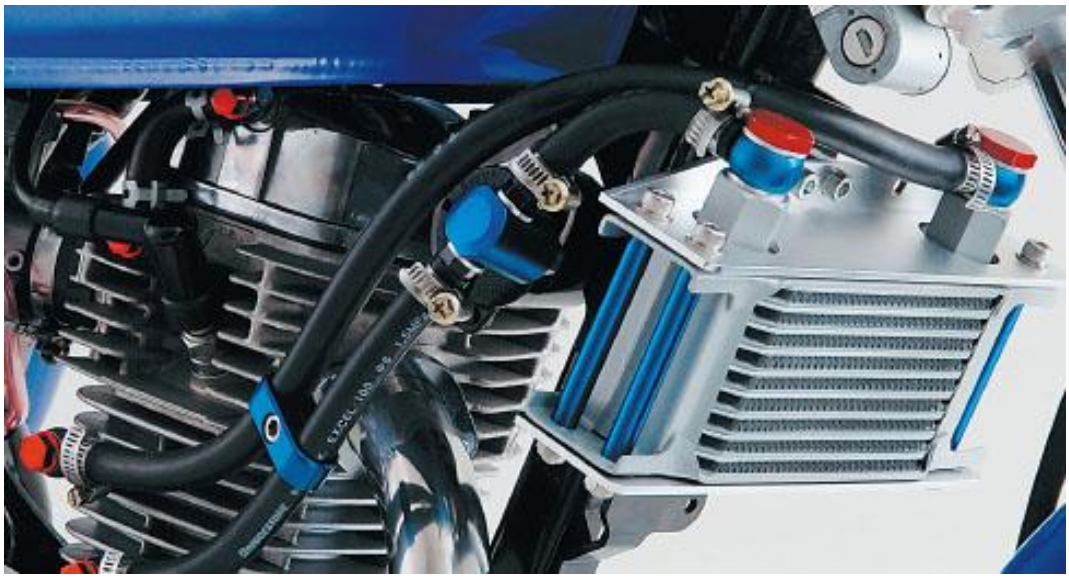

Le radiateur d'huile ci-dessus est juste une recommandation.

L'huile moteur peut malgré tout dépasser les 90°c ou 194° Fahrenheit, y compris en utilisant ce radiateur.

L'utilisateur doit contrôler avec précaution la température d'huile.

SCHEMA ELECTRIQUE

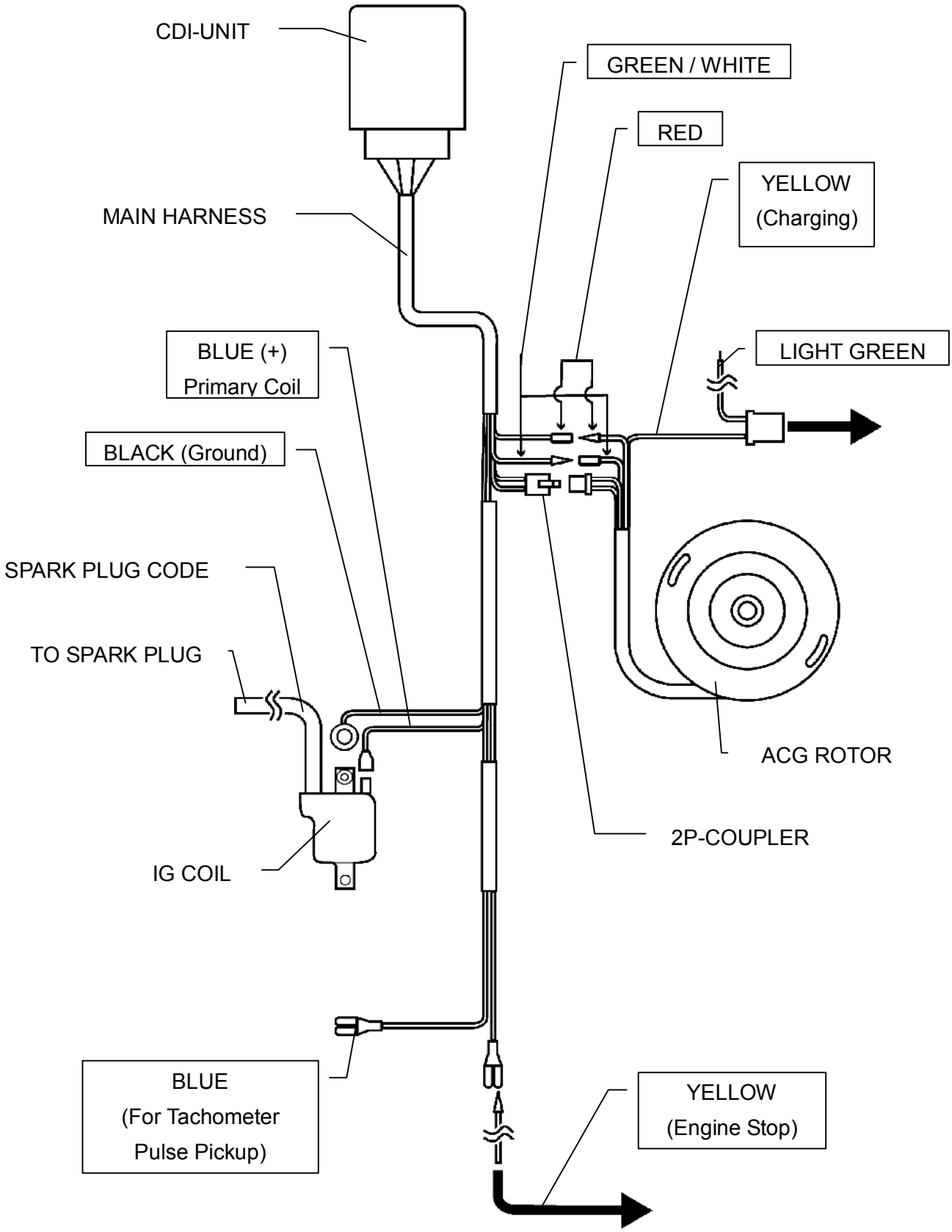

PIECES OPTIONNELLES

RADIATEUR D'HUILE

Les radiateurs d'huile suivants sont disponibles au catalogue Daytona mais le support de montage spécifique à votre moto n'est pas fourni. Les pièces contenues dans le kit sont présentées ci-dessous :

Daytona Part# 61785

7-Core Oil Cooler Kit

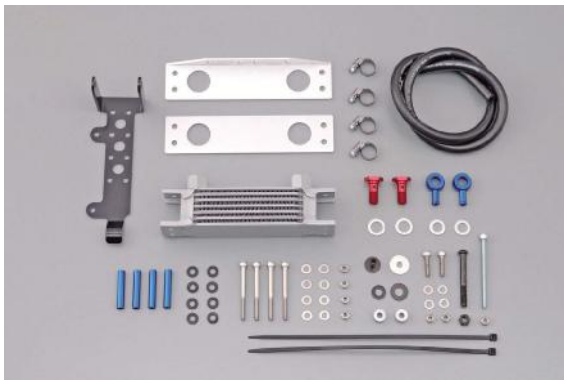

Daytona Part# 62759

10-Core Oil Cooler Kit

(The same kit components as #61785.)

JAUGE DE TEMPERATURE D HUILE & ADAPTATEUR

Cette jauge est disponible au catalogue Daytona. La jauge (#47101) est compatible avec le radiateur d'huile Daytona (#61785) en utilisant le capteur Daytona (#43350).

Daytona Part# 47101

Temp. gauge & sensor, 0-150 degrees Celsius

PT1/8(Tapered Thread)-Sensor fitting

Daytona Part# 43350

Sensor fitting

For PT1/8(Tapered Thread) sensor

Designed for a 8mm inner dia. oil hoses

PIECES OPTIONNELLES

DISQUE D'EMBRAYAGE RENFORCE

Daytona Part # 84749

Reinforced clutch friction disc, 1pc

Made by FCC JAPAN

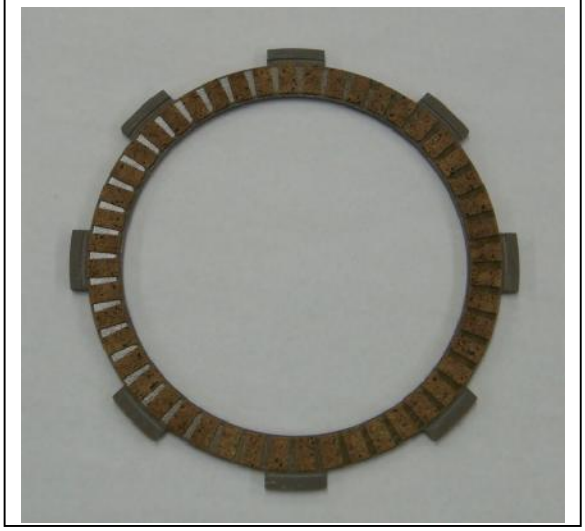

CHAINE DE DISTRIBUTION RENFORCEE

Daytona Part # 84750

Reinforced cam chain, 88 Link 25HS

Solid Bushing

Made in Japan

WARNING

Ces pièces sont conçues pour la compétition.

TOUT DOMMAGE CAUSE PAR L'INSTALLATION DE CES PIECES OPTIONNELLES NE POURRA ETRE CONSIDERE COMME ETANT UN VICE DE FABRICATION.

CARBURETOR KEIHIN PE28

Daytona Part # 85707 (with Throttle valve #3.0) *Recommendation

Daytona Part # 83952 (with Throttle valve #2.0)

Keihin PE28 Carburetor

PIECES OPTIONNELLES

CARBURETOR SETTING PARTS

Daytona Part # 31123

Main Jet Set (8 pcs/set) for Keihin

#115,118,120,122,125,128,130,&132

Daytona Part # 31124

Main Jet Set (8 pcs/set) for Keihin

#128,130,132,135,138,140,142,&145

Daytona Part # 69906

Slow Jet Set, 6pcs/set

Air bleed type

For Keihin PE & PWK

#35, 38, 40, 42, 45, & 48

Daytona Part # 65414

JET NEEDLE

#69359 / 46JFL (+2 / Diameter of straight ϕ2.465 / RICH)

#69361 / 46JFM (+1 / ϕ2.475)

#69374 / 46JFN (0 / ϕ2.485 / STD)

#69376 / 46JFP (-1 / ϕ2.495)

#69414 / 46JFQ (-2 / ϕ2.505)

#69378 / 46JFR (-3 / ϕ2.515)

#69380 / 46JFS (-4 / ϕ2.525 / LEAN)

*Angle of taper = 3 deg (all)

* Height to taper = 26.77mm(all)

Daytona Part No.

Throttle valve / For PE28

 # 65416 (# 2.0)

 # 69353 (# 2.5)

 # 69354 (# 3.0)

 # 69355 (# 4.0)

KIT PIECES RACING

ATTENTION

Since these UPGRADE KIT PARTS are designed specifically for the top competition riders, ANY FAILURES CAUSED BY THE INSTALLATION OF THESE OPTIONAL PARTS ARE NOT CONSIDERED AS THE DEFECTS OF PRODUCTS.

HI-COMP PISTON 2V – DT150

Daytona Part # 85043

Compression ratio 13.8:1 (Std = 12.5:1)

CAM SHAFT UPGRADE

Daytona Part # 84835

(A053 type / two lines)

A053 CAM Angle = 268deg / lift in = 8.67mm , ex = 8.52

(std CAM = Angle = 240deg / lift in = 7.23mm , ex = 6.81)

KIT PIECES RACING

ATTENTION

Ces pièces sont conçues pour la compétition.

TOUT DOMMAGE CAUSE PAR L'INSTALLATION DE CES PIECES OPTIONNELLES NE POURRA ETRE CONSIDERE COMME ETANT UN VICE DE FABRICATION.

KIT RACING 4 SOUPAPES DOHC

Ce nouveau kit 4 soupapes a été conçu pour maximiser les performances du nouveau DAYTONA 150E.

Daytona Part #84427

Twin Cam Cylinder Head Kit with Cylinder and Piston

DAYTONA 150E ENGINE
Owner's Manual

KIT PIECES RACING

ATTENTION

Ces pièces sont conçues pour la compétition

TOUT DOMMAGE CAUSE PAR L'INSTALLATION DE CES PIECES OPTIONNELLES NE POURRA ETRE CONSIDERE COMME ETANT UN VICE DE FABRICATION.

DAYTONA 150E ENGINE with Twin Cam Head Kit (#84427)

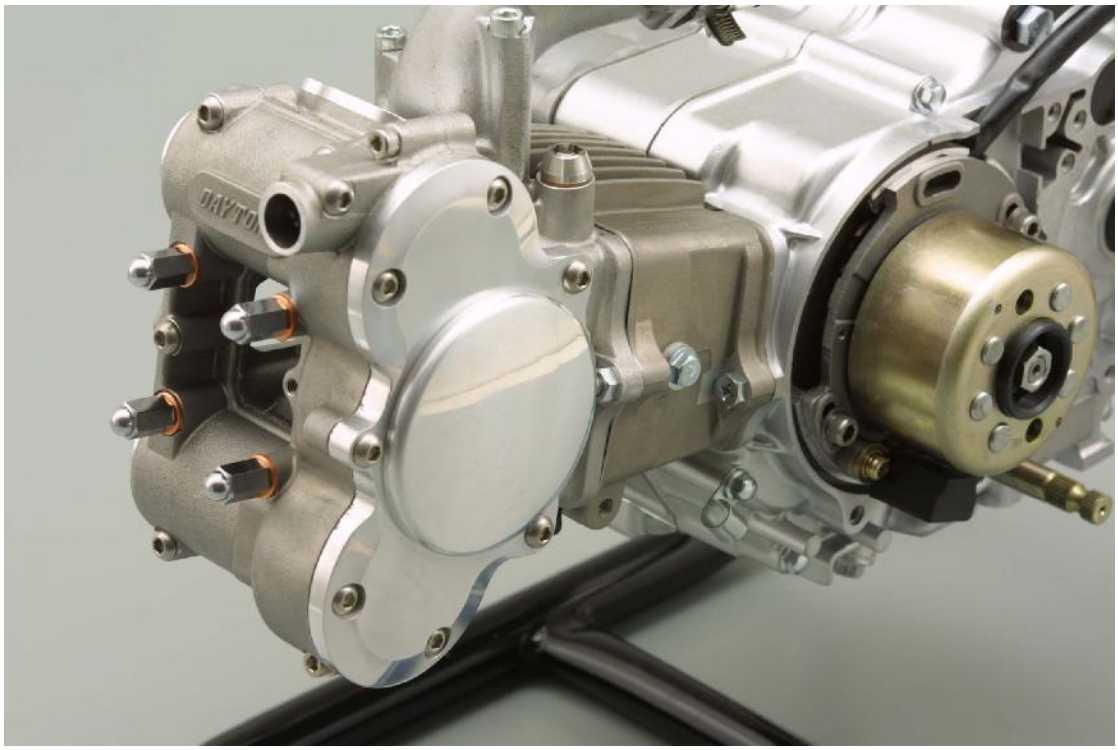

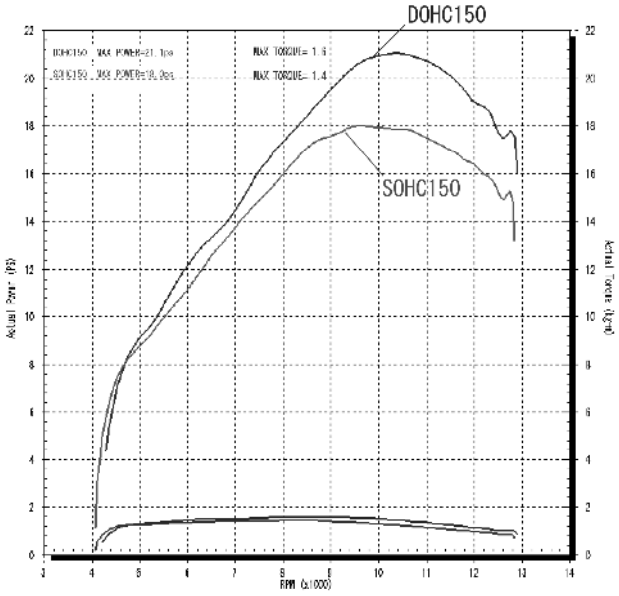

DAYTONA 150E ENGINE
Owner's Manual

PARTS CATALOGUE （engine No. DAYTONA150E091200000-　）

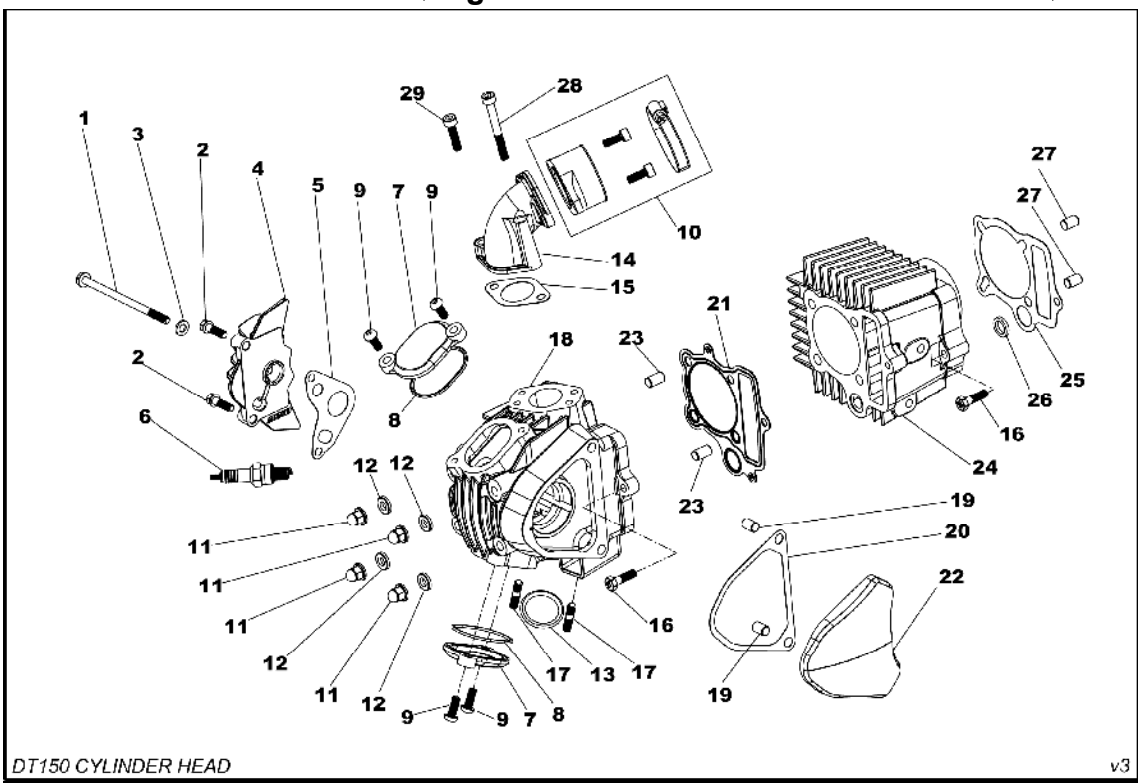

CYLINDER HEAD			
Ref No.	Part No.	English Description	Q'ty
1	83693	BOLT M6×110	1
2	83716	BOLT M6×20	2
3	83694	WASHER 6.5×1×12	1
4	84386	COVER, R.CYLINDER HEAD SIDE	1
5	84400	GASKET, CYLINDER HEAD RIGHT COVER (t=0.5)	1
6	84650	SPARK PLUG (NGK CR8HSA type)	1
7	84667	COVER ASSY, VALVE CHAMBER	2
8	84668	O-RING,TAPPET COVER	2
9	32784	BOLT M6 x 15	4
10	46758	RUBBER MANIFOLD SET (for KEIHIN PE28)	1
11	83700	NUT M7	4
12	83702	WASHER 7.3×2.5×14(Cu)	4
13	84754	EXHAUST GASKET	1
14	84387	INTAKE MANIFOLD (for 28mm)	1
15	84358	GASKET,INTAKE (t=0.5)	1
16	83705	BOLT M6×23	2
17	83703	STUD M6×32	2
18	84362	CYLINDER HEAD (wide pitch)	1
19	83747	DOWEL PIN 8×12×6.3	2
20	84401	GASKET, CYLINDER HEAD LEFT COVER (t=0.5)	1
21	84359	GASKET , CYLINDER HEAD (t=1.0)	1
22	84385	COVER,LCYLINDER HEAD SIDE	1
23	83709	LOCATING DOWEL 8×14×7	2
24	84363	CYLINDER (D=57 / L=75.8mm)	1
25	84360	GASKET , CYLINDER BASE (t=0.5)	1
26	83717	RUBBER GASKET	1
27	83712	DOWEL PIN 8×12×7	2
28	32788	BOLT M6×55	1
29	84402	BOLT M6×25	1

DAYTONA 150E ENGINE
Owner's Manual

PARTS CATALOGUE （engine No. DAYTONA150E091200000-　）

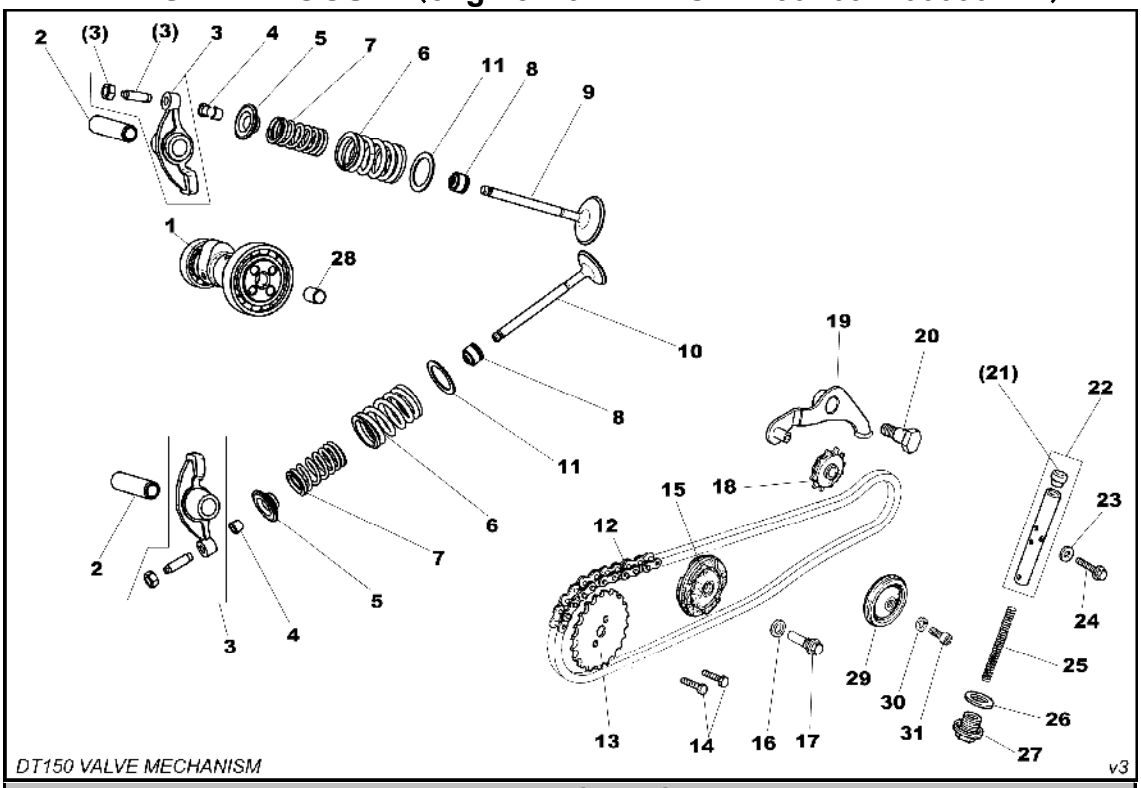

VALVE MECHANISM			
Ref No.	Part No.	English Description	Q'ty
1	84428	CAMSHAFT COMP (A023 type)	1
(1)	84835	HIGH PERFORMANCE CAMSHAFT COMP (A053 type/ option)	(1)
2	84334	SHAFT VALVE ROCKER ARM	2
3	84669	ASSEMBLY, VALVE ROCKER ARM	2
4	26550	VALVE COTTER SET(4)	1
5	26553	RETAINER SET	1
6	84399	VALVE SPRING OUTER	2
7	84398	VALVE SPRING INNER	2
8	84336	VALVE STEM SEAL	2
9	84371	INTAKE.VALVE	1
10	84372	EXHAUST.VALVE	1
11	84670	SPRING,SEAT	2
12	84368	TIMING CHAIN ASSY (88)	1
13	83725	TIMING DRIVEN SPROCKET	1
14	83726	BOLT M5×12	2
15	84644	CHAIN GUIDE ROLLER GROUP (45)	1
16	83729	WASHER 8.5×1.5×14	1
17	83730	PIN, CAM CHAIN GUIDE ROLLER	1
18	84645	TENSIONER ROLLER ASSY	1
19	83859	TENSIONER LEVER COMP	1
20	83734	AXLE, CAM CHAIN TENSIONER LEVER	1
21	83735	CHAIN TENSIONER PUSH ROD HEAD (material=DELRIN)	(1)
22	85006	TENSIONER PUSH ROD ASSEMBLY(with DELRIN top)	1
23	83737	WASHER 6.5×1.5×12	1
24	83738	BOLT M6×18	1
25	83739	SPRING, TENSION PUSH ROD	1
26	83740	WASHER 14.2×1.5×20	1
27	83741	SEALING PLUG M14×1.5	1
28	83747	LOCATING DOWEL 8×12X6.3	1
29	84643	OIL PUMP DRIVEN SPPOCKET	1
30	84671	WASHER(FOR CHAIN ROLER SIDE)	1
31	84672	SCREW,OIL PUMP SPROCKET	1

DAYTONA 150E ENGINE
Owner's Manual

PARTS CATALOGUE （engine No. DAYTONA150E091200000-　）

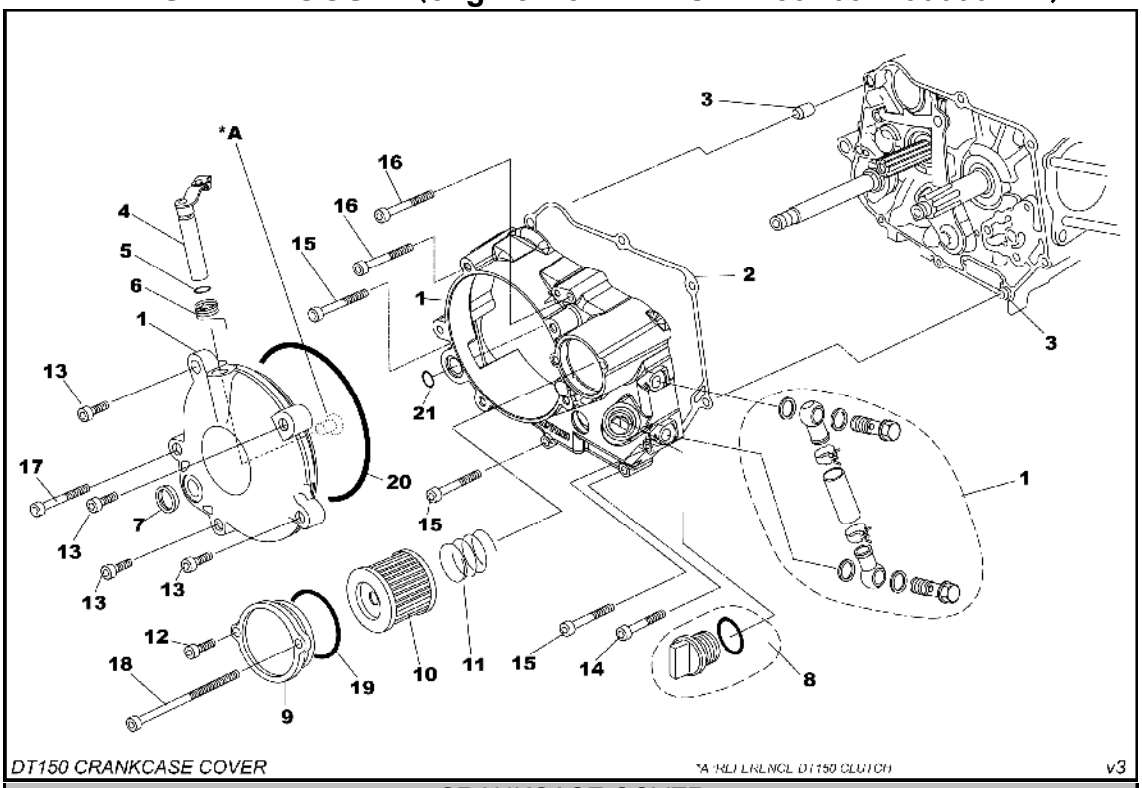

CRANKCASE COVER			
Ref No.	Part No.	English Description	Q'ty
1	84219	CRANK CASE COVER ASSY	1
2	84673	GASKET, R.CRANKCASE COVER (for DT150)	1
3	83747	LOCATING DOWEL 8x12x6.3	2
4	83742	CLUTCH LEVER	1
5	84229	O-RING,P9	1
6	83743	CLUTCH LEVEL SPRING	1
7	83767	OIL SEAL 13.8x24x5,KICK SHAFT	1
8	84674	OIL RULER	1
9	84220	COVER,OIL FILTER	1
10	83489	OIL FILTER	1
11	83839	OIL FILTER SPRING	1
12	32784	BOLT M6×15	1
13	32785	BOLT M6×20	4
14	84642	BOLT M6×45	1
15	32787	BOLT M6×50	3
16	32788	BOLT M6×55	2
17	32790	BOLT M6×75	1
18	32792	BOLT M6×132	1
19	84226	O-RING,G45	1
20	84227	O-RING,G120	1
21	84228	O-RING,P14	1

PARTS CATALOGUE （engine No. DAYTONA150E091200000-　）

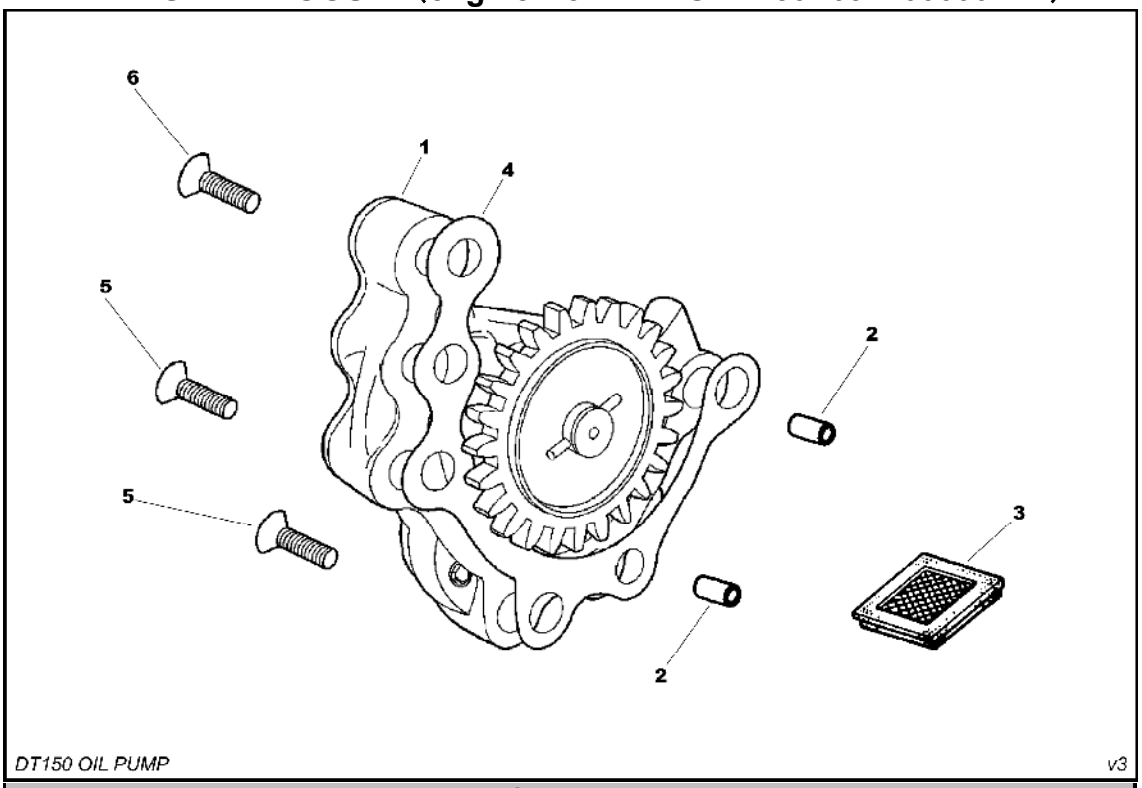

OIL PUMP			
Ref No.	Part No.	English Description	Q'ty
1	84675	OIL PUMP COMPONENT	1
2	83747	LOCATING DOWEL 8×12X6.3	2
3	83751	OIL FILTER SCREEN ASSY	1
4	84676	GASKET, OIL PUMP	1
5	84677	SCREW M6×40	2
6	84678	SCREW M6×35	1

DAYTONA 150E ENGINE
Owner's Manual

PARTS CATALOGUE （engine No. DAYTONA150E091200000-　）

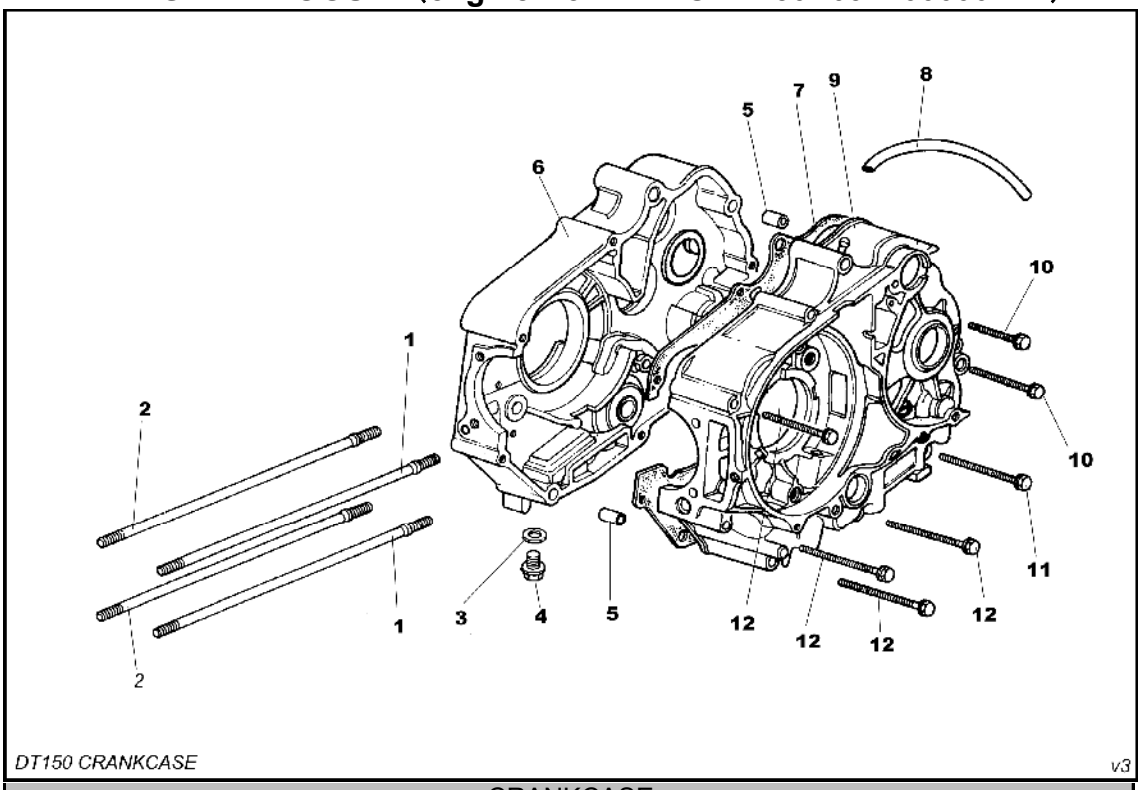

CRANKCASE			
Ref No.	Part No.	English Description	Q'ty
1	84679	STUD BOLT A (L217)	2
2	84680	STUD BOLT B (L209)	2
3	83755	OIL DRAIN PLUG M12×1.5	1
4	83754	WASHER 12.5×1.5×20	1
5	83720	LOCATING DOWEL 10×14	2
6	84681	RIGHT SIDE CRANK CASE(SMALL HOLE)	1
7	84682	GASKET, CRANKCASE	1
8	83758	TIE-IN, BREATHER TUBE	(1)
9	84683	LEFT SIDE CRANK CASE(SMALL HOLE)	1
10	83759	BOLT M6×60	2
11	83760	BOLT M6×45	1
12	83761	BOLT M6×65	4

DAYTONA 150E ENGINE
Owner's Manual

PARTS CATALOGUE （engine No. DAYTONA150E091200000-　）

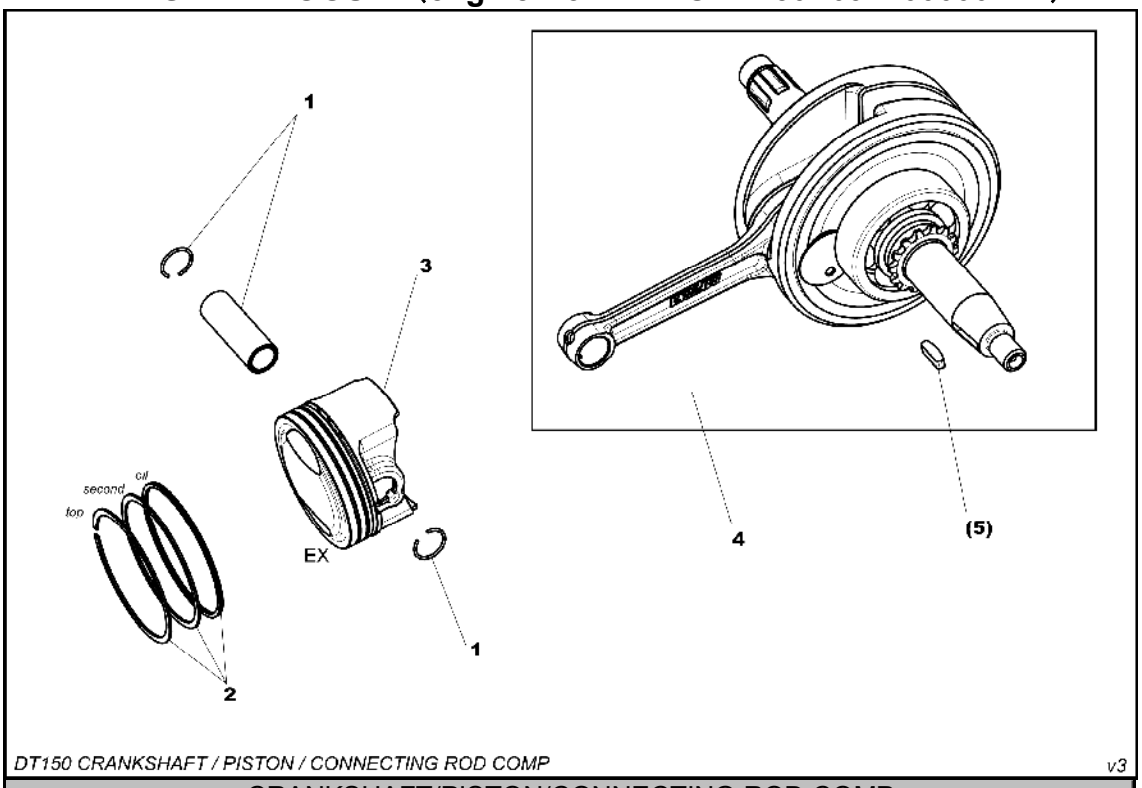

CRANKSHAFT/PISTON/CONNECTING ROD COMP			
Ref No.	Part No.	English Description	Q'ty
1	82924	PISTON PIT & CLIP, PISTON PIN（2）	1
2	84397	PISTON RING COMP	1
3	84361	PISTON 57mm (STD)	1
(3)	85043	HIGH COMPRESSION PISTON 57mm (option)	(1)
4	84364	CRANKSHAFT COMP.CONNECTING ROD	1
5		SEMICIRCULAR KEY 4×12.5	(1)

DAYTONA 150E ENGINE
Owner's Manual

PARTS CATALOGUE （engine No. DAYTONA150E091200000-　）

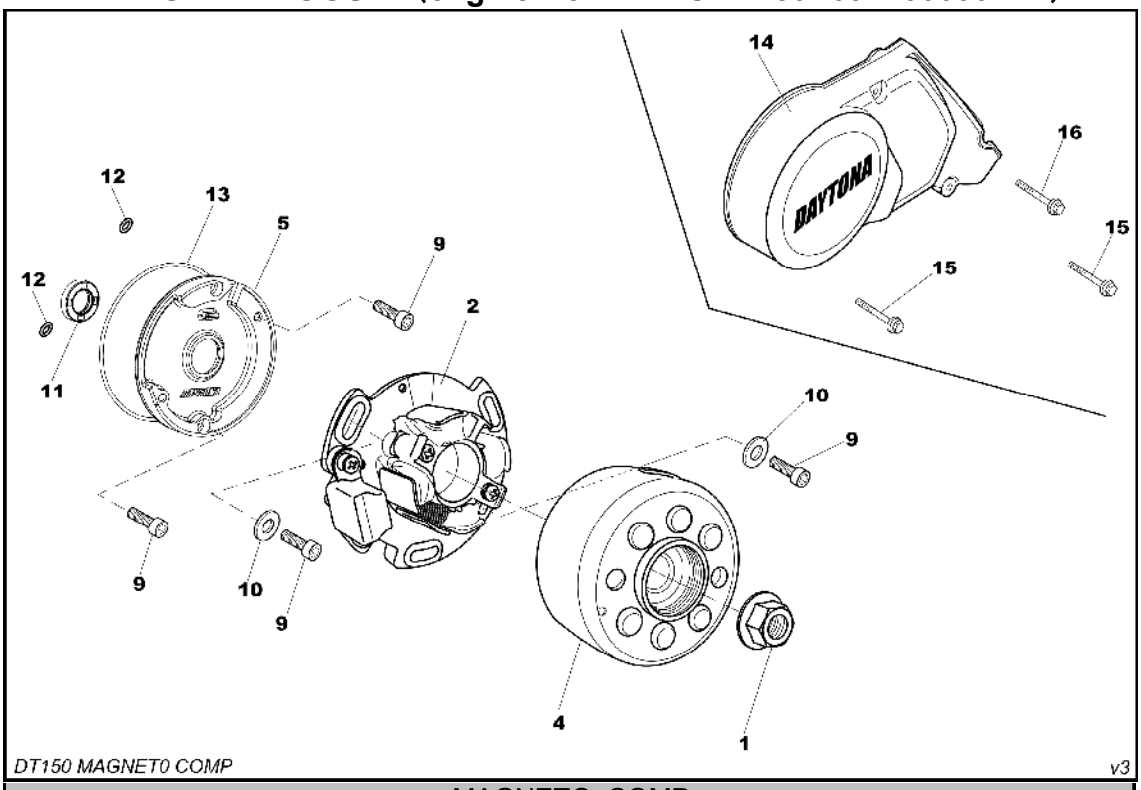

MAGNETO COMP			
Ref No.	Part No.	English Description	Q'ty
1	83763	NUT	1
2	83722	STATOR COIL	1
3	83744	WIRING	1
4	83762	ROTOR	1
5	84199	BASE PLATE	1
6	84200	CDI	1
7	84201	IG COIL	1
8	84202	PLUG CAP	1
9	32784	BOLT M6×15	4
10	84225	WASHER M6 (SUS)	2
11	83907	OIL SEAL,MAGNET ROTATOR	1
12	84221	O-RING 6.5×1.8	2
13	84222	O-RING 106.8×2	1
14	84684	MAGNET COVER(WITH LOGO)	1
15	84685	BOLT M6 X 28	2
16	84686	BOLT M6 X 35	1

DAYTONA 150E ENGINE
Owner's Manual

PARTS CATALOGUE （engine No. DAYTONA150E091200000-　）

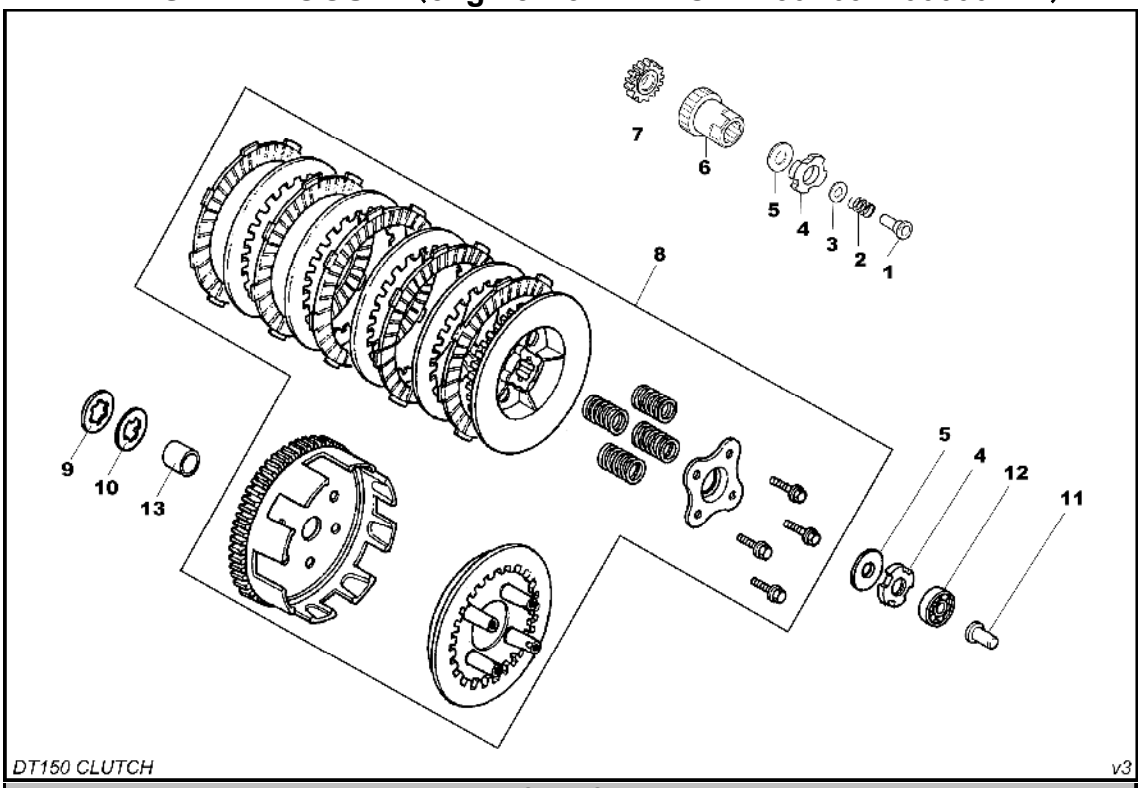

CLUTCH			
Ref No.	Part No.	English Description	Q'ty
1	84309	OIL THROUGH	1
2	83714	SPRING, OIL THROUGH	1
3	84225	WASHER M6 (SUS)	1
4	83768	LOCK NUT M14×1 (D22xM14xP1.0 / small type)	2
5	83769	SPRING WASHER (D24x14.2xT0.8)	2
6	84687	DRIVE GEAR 18T	1
7	84688	PUMP DRIVE GEAR	1
8	84865	CLUTCH ASSEMBLY (Rainforced 5DISK+HARD SPG) / 67T	1SET
9	83772	SPRINE WASHER, CLUTCH	1
10	83773	FIXING RING, CLUTCH	1
11	83787	PUSH ROD, CLUTCH (L=15.5mm)	1
12	83786	BEARING (6000)	1
13	83774	SLEEVE, CLUTCH	1

DAYTONA 150E ENGINE
Owner's Manual

PARTS CATALOGUE （engine No. DAYTONA150E091200000-　）

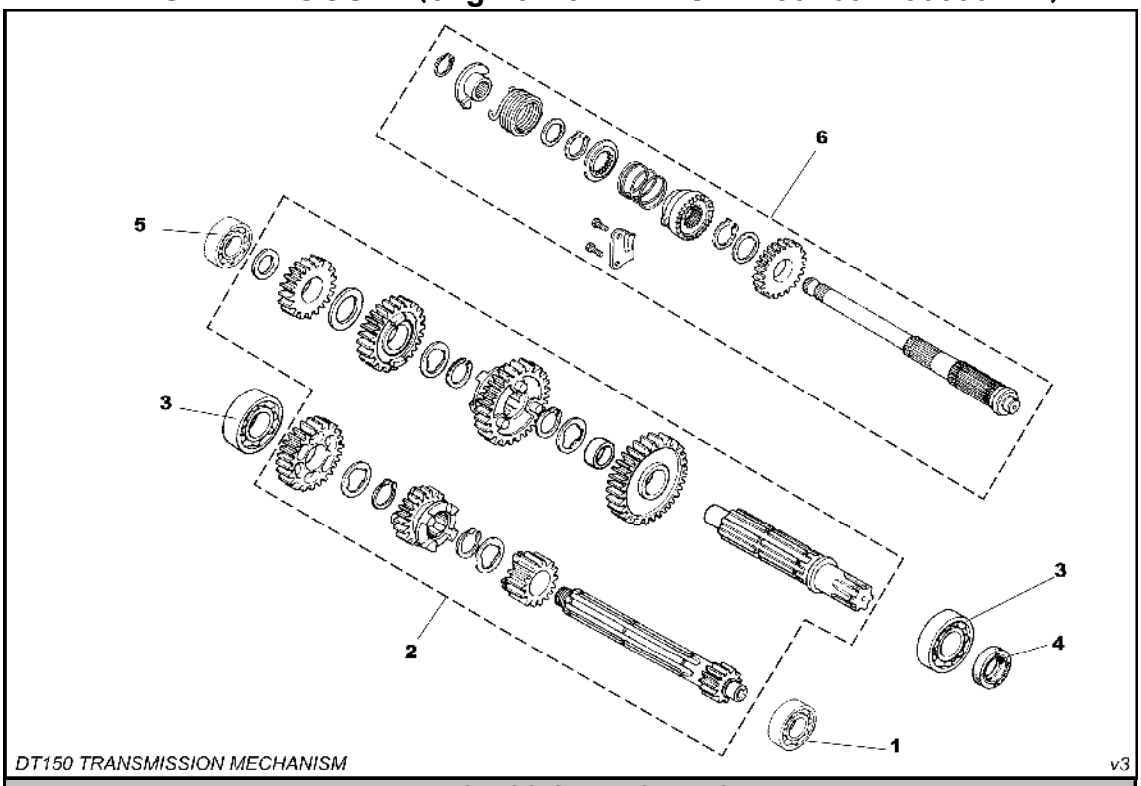

TRANSMISSION MECHANISM			
Ref No.	Part No.	English Description	Q'ty
1	83788	BEARING (6001)	1
2	84864	GEAR,ASSEMBLY (MAIN & COUNTER) / DT150BS type	1
3	83795	BEARING (6203)	2
4	83796	OIL SEAL 17×29×5	1
5	83808	BEARING (6201)	1
6	84690	KICK STARTING ASSEMBLY (pinion=23T)	1

	1st	2nd	3rd	4th
MAIN	13	17	20	23
COUNTER	34	29	26	24
	(2.6153)	(1.7058)	(1.3000)	(1.0434)

WARNING

84864 GEAR,ASSEMBLY(DT150BS) ---- ONLY FOR USE 84866 SHIFT DRUM(DT150BS)

DAYTONA 150E ENGINE
Owner's Manual

PARTS CATALOGUE （engine No. DAYTONA150E091200000-　）

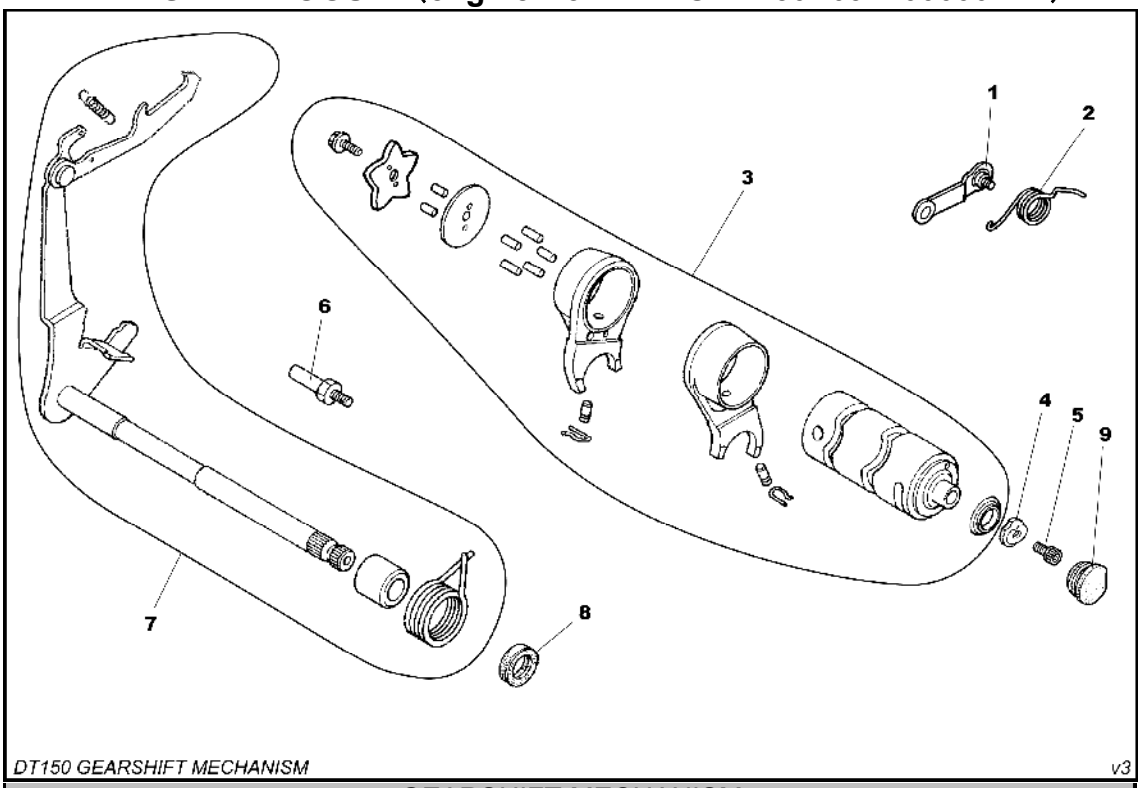

GEARSHIFT MECHANISM			
Ref No.	Part No.	English Description	Q'ty
1	83822	LOCATING PLATE UNIT	1
2	83823	SPRING, LOCATING PLATE	1
3	84866	ASSEMBLY, GEAR SHIFT DRUM (for DT150BS type)	1
4	83833	CONTACT, GEAR INDICATION	1
5	83824	BOLT M6×16	1
6	83836	BOLT M8×11	1
7	84391	ASSEMBLY, GEARSHIFT LEVER	1
8	83837	OIL SEAL 11.6×24×10	1
9	83679	RUBBER PLUG	1

4866　ASSEMBLY, GEAR SHIFT DRUM (for DT150BS type	
Gearshift pattern	N - 1 - 2 - 3 - 4